International Journal of Science and Research (IJSR)
ISSN (Online): 2319-7064
Index Copernicus Value (2013): 6.14 | Impact Factor (2013): 4.438

Finite Element Stress Analysis of a Typical Steam Turbine Blade

P. Vaishaly[1], B. S. V. Ramarao[2]

[1]M.Tech student, Department of mechanical engineering (Machine Design),
Aurora's Technological and Research Institute, Hyderabad, Telangana State, India

[2] Associate Professor, Department of mechanical engineering,
Aurora's Technological and management Academy, Hyderabad, Telangana State, India

Abstract: ***Low pressure turbine is very critical from strength point of view because of the high centrifugal and aerodynamic loading. The stress in these highly twisted blades is required to be evaluated accurately in order to avoid blade failures and cracking. In the present work, effect of 'pressure loading on the blade surface' and 'centrifugal loading' on the steady state stress has been studied. 3D blades from the given profile data for the last stage of a typical steam turbine is generated by stacking 2D profile sections in a customized software including blade root attachment. The generated model is meshed in ANSYS package driven by customized software and the pressure distribution is mapped on the blade surface. Steady state stress analysis generated to understand the dynamic behavior of the blade.***

Keywords Finite Element analysis, airfoil, root, Disk, stress analysis**.**

1. Introduction to Steam turbine blade

A steam turbine is a mechanical device that extracts thermal energy from high temperature and high pressure steam, and converts it into rotary motion. It has almost completely replaced the reciprocating piston steam engine primarily because of its greater thermal efficiency and higher power-to-weight ratio. Because the turbine generates rotary motion, it is particularly suited to be used to drive an electrical generator – about 80% of all electricity generation in the world is by use of steam turbines. The steam turbine is a form of heat engine that derives much of its improvement in thermodynamic efficiency through the use of multiple stages in the expansion of the steam, which results in a closer approach to the ideal reversible process.

1.1 Introduction of types of steam turbine

Steam turbines are made in a variety of sizes ranging from small 0.75 kW units (rare) used as mechanical drives for pumps, compressors and other shaft driven equipment, to 1,500,000 kW turbines used to generate electricity. There are several classifications for modern steam turbines.

1.2 Steam Turbine Classification

Steam Turbines have been classified by:

(a) Stage design as
(i) Impulse
(ii) Reaction

(b) Steam supply and exhaust conditions as
(i) Condensing
(ii) Back Pressure (Non Condensing)
(iii) Mixed Pressure
(iv) Reheat
(v) Extraction type (Auto or Controlled)

(c) Casing or shaft arrangement as
(i) Single Casing
(ii) Tandem compound
(iii) Cross Compound

2. Introduction to Finite Element Analysis

Finite Element Analysis (FEA) is a computer-based numerical technique for calculating the strength and behavior of engineering structures. It can be used to calculate deflection, stress, vibration, buckling behavior and many other phenomena. It can be used to analyze either small or large-scale deflection under loading or applied displacement. It can analyze elastic deformation, or "permanently bent out of shape" plastic deformation. The computer is required because of the astronomical number of calculations needed to analyze a large structure. The power and low cost of modern computers has made Finite Element Analysis available to many disciplines and companies.

In the finite element method, a structure is broken down into many small simple blocks or elements. The behavior of an individual element can be described with a relatively simple set of equations. Just as the set of elements would be joined together to build the whole structure, the equations describing the behaviors of the individual elements are joined into an extremely large set of equations that describe the behavior of the whole structure. The computer can solve this large set of simultaneous equations. From the solution, the computer extracts the behavior of the individual elements. From this, it can get the stress and deflection of all the parts of the structure. The stresses will be compared to allowed values of stress for the materials to be used, to see if the structure is strong enough.

The term "finite element" distinguishes the technique from the use of infinitesimal "differential elements" used in calculus, differential equations, and partial differential equations. The method is also distinguished from finite difference equations, for which although the steps into which space is divided are finite in size, there is little freedom in the shapes that the discreet steps can take. Finite element

Licensed Under Creative Commons Attribution CC BY

analysis is a way to deal with structures that are more complex than can be dealt with analytically using partial differential equations. FEA deals with complex boundaries better than finite difference equations will, and gives answers to "real world" structural problems. It has been substantially extended in scope during the roughly 40 years of its use.

2.1 Steps Involved Finite Element Analysis

The steps in the finite element method when it is applied to structural mechanics are as follows.

1) Divide the continuum into a finite number of sub regions (or elements) of simple geometry such as line segments, triangles, quadrilaterals (Square and rectangular elements are subset of quadrilateral), tetrahedrons and hexahedrons (cubes) etc.
2) Select key point on the elements to serve as nodes where conditions of equilibrium and compatibility are to be enforced.
3) Assume displacement functions within each element so that the displacements at each generic point are depending upon nodal values.
4) Satisfy strain displacement and stress – strain relationship within a typical element.
5) Determine stiffness and equivalent nodal loads for a typical element using work or energy principles.
6) Develop equilibrium equations for the nodes of the discretized.
7) Continuum in terms of the element contributions.
8) Solve the equilibrium for the nodal displacements.

The basic premise of the FEM is that a solution region can be analytically modeled or approximated by replacing with an assemblage of discrete elements. Since these elements can be put together in a variety of ways, they can be used to represent exceedingly complex shapes. The important feature of the FEM which sets it apart from the other approximate numerical methods, is the ability to format solutions for the individual element before putting them together to represent the entire problem. Another advantage of FEM is the variety of ways in which one can formulate the properties of individual elements.

The structural analysis process by computer methods can be characterized by the three steps as shown in Figure 1.

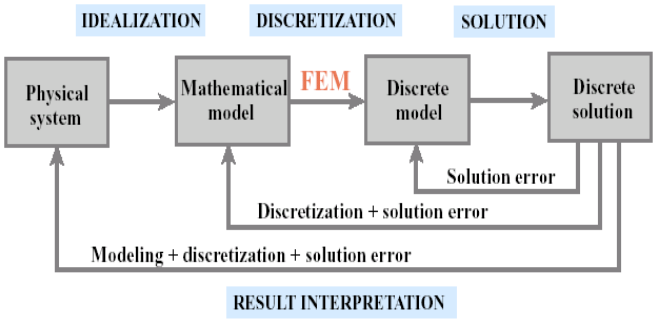

Figure 1: Role of the FEM in structural analysis process

3. Stress Analysis

The steady state stress at any section of a parallel sided blade is a combination of direct tensile load due to centrifugal force and the bending load due to steam force, both of which are acting on that portion of blade between the section under consideration and the tip section. The direct tensile stress is maximum at the blade root. It is decreasing towards the blade tip. The tensile stress (centrifugal stress) depends on the mass of material in the blade, blade length, rotational speed, and the cross sectional area of blade. Impulse blades are subject to bending stresses from centrifugal force if the centroids of all sections do not lie a long a single radial line and the tangential force exerted by fluid. While reaction blades have an additional bending stress that is due to the large axial thrust resulting from the pressure drop which occurs in the blade passages. The bending stress is maximum at the blade root. The combined tension and bending stress is also maximum at blade roots and diminishes with radius. If the blade is tapered, the direct tensile stress diminishes rapidly towards the blade tips, while the bending stress can be made to increase at greater radii. It is therefore possible to design the blade as a cantilever, with constant tensile stress (centrifugal stress) and bending stress. The blade material is much more effectively utilized there. Provision must be made in the blade design to get a blade that withstands all these stresses encountered in operation at an acceptable long service life.

4. Introduction of ANSYS

ANSYS has evolved into a very powerful FE-based analysis system to suit a variety of engineering applications in specific areas such as structural and thermal engineering, electro-magnetics, acoustics, computational fluid dynamic analyses, etc. ANSYS has rapidly become one of the most widely used simulation and analysis software.

4.1 Problem solving approach through FEM

1) Pre-processing.
2) Processing (solution).
3) Post-processing.

4.1.1 Pre-processing

It consists of solid model generation and discretization that in to finite elements. Definition of properties of modal such as element type, material properties, various constants such as young's modulus, Poisson ratio etc., dimension of each element i.e., thickness, moment of inertia, area etc.

1 Meshing

The mesh can be generated either form the solid model or direct generation. In direct generation method the nodes are defined first and the elements are interconnected to obtain the final model. In solid generation method solid model is generated and then, model is divided into finite elements. This conversion of solid model to finite elements is done through mesh generation. This method is more useful for complex models. In the present work solid generation method is used for making FEM models. Elements from solid model method can be subdivided into two categories.

2 Free meshing: Free meshing allows more flexibility in defining mesh areas. Free mesh boundaries can be much more complicated than mapped mesh without subdividing in to multiple regions. The mesh will automatically be created

Licensed Under Creative Commons Attribution CC BY

by an algorithmic that tries to minimize element distortion (deviation from a perfect square). Free mesh surfaces can easily have internal holes, where mapped mesh surfaces can't. Free meshing is controlled by two parameters assigned to each mesh surface or volume that effect the size of the elements generated. The first is the element length, which is the normal size of elements the program will attempt to generate. The second parameter controls mesh refinement at curves in the model by controlling how much deviation is allowed between straight element sides and curved boundaries. This parameter is expresses either as a percent deviation or an absolute number.

3 Mapped meshing: Mapped meshing requires the same number of elements on opposite sides of the mesh area, and requires that mesh area be bounded by three or four "edges". If you define a mapped mesh area with more than four curves, you must define which vertices are topological corners of the mesh. Mapped mesh boundaries with three corners will generate triangular elements in on "degenerate" corner. The number of elements per edge and biasing of elements of elements of element size towards the end or the center of edges control the mesh density. We can get quality mesh by free meshing but the number of elements formed will be more because the free meshing algorithm is like, it produces more elements at curvatures. Normally turbo machine blades are very curved and twisted, so we get only dense meshed FE model by free meshing. For solving these dense meshed FE models we should pay more system time and disc space. So that for the present work mapped meshing method was chosen for FE modeling of the blades. Another advantage of mapped meshing is we can produce dense mesh where we are interested and can produce coarse mesh where we are not interested even though it is of curved structure.

Coupling Equations

When it needs to force two or more degrees of freedom to take on the same (but unknown) value, it is require to couple these degrees of freedom together. A set of coupled degrees of freedom (dof) contains a prime & one or more other degrees of freedom coupling. The value calculated for the prime degrees of freedom will then be assigned to all the other degrees of freedom in a coupled set. Typical application for coupled degrees of freedom includes:

- Maintaining symmetry on partial models.
- Forming pin, hinge, universal, and slider joint between two.
- Forcing portions of the model to behave as rigid bodies.

Constraint Equations

Constraint equation provides a more general means of relating degrees of freedom values than is possible with simple coupling.

4.1.2 Processing (solution)

After the model is built in the pre-processing phase, the solution of the analysis is obtained. The analysis type indicates to the processor the governing equations to be used to solve the problems, the general categories available include structural, thermal, and electromagnetic field, computational fluid dynamics etc., and each category can include several specific analysis type, such as static or dynamics analysis.

Processing requires no user interaction. All analysis types are based on classical engineering concepts. These concepts can be formulated into matrix equations that are suitable for analysis using FEM. It calculates transformation matrices. It maps element equations in to global system, and hence assembly of elements takes place. Boundary conditions are introduced and solution procedures are performed.

For structural analysis problem the displacement, stiffness and loads are related as given below:

$$[K]\{q\}= [F]$$

Where [K]= structural stiffness.
{q}=Nodal displacement.
[F]=load matrix.

In the solution phase we really end up with governing equations for each element. By solving these equations at each node, we obtain the degrees of freedom, which would give the approximate behavior of complete model.

4.1.3 Post-processing

The post processing of data includes presentation of result such component/assembly deformed shapes, strains and stress distribution etc.. During post processing the results can be shown graphically or in text form as described below:

- **Displacement shapes:** deformed and un-deformed mesh is displayed.
- **Contours:** Iso quantity plots such as iso-stress surfaces etc.
- **Animation:** mode shapes, time dependent or harmonic results can portrayed vividly.
- **Auto generation:** results are presented in the form of charts, tables, graphs etc.

The major job of post-processor is to present results in an easy way with pictorial representation. This aid in determining the basic trends and then concentrates on critical areas. The user can also exercise control over the viewing direction, magnification, parameters displayed, color maps etc. The additional information which can be used further for optimization of design like weight reduction, optimum configuration etc.

5. Introduction of the Customized Software

A customized had been developed by the commercial vendor which uses ANSYS as the core engine. It is an ANSYS based turbine blade analysis system with extensive automation for solid model and F.E. model generation, boundary condition application, file handling and job submission tasks for a variety of complex analyses; the program also includes turbo machinery specific post-processing and life assessment modules. This customized software having cutting-edge example for vertical applications built on the core ANSYS engine using ANSYS APDL and Tcl/Tk. The software having capabilities for pre-processing, static and dynamic stress analyses, generation of Campbell and Interference diagrams and life assessment. The principal advantage of this software is its ability to generate accurate results in a short amount of time, thus reducing the design cycle time.

Licensed Under Creative Commons Attribution CC BY

Some of the important strengths for this customized software are mentioned below:

a) A user-friendly interactive interface that allows for rapid model, mesh generation and extraction of the useful results.
b) Low level information required for the solid and FE model entities available to the end user through APDL calls.
c) Robustness and ability in generating and meshing complex geometries driven by parametric inputs.
d) Support for a variety of physics environments,
e) Minimal effort involved in porting an ANSYS application.

This customized software is using a FE analysis platform which is menu driven, easy-to-use analysis tool. This customized software has capability to carry out the analysis mentioned below:

5.1 Geometric Modeling

The following are the modeling capability of the blade.

1. **Cover Data**
   a) No Cover
   b) Peened Tenon (Up-to three tenons)
   c) Integral Cover
   d) Over/Under (Up-to three tenons, currently not supported)
2. **Airfoil Data**
3. **Root Data**
   a) Straddle Mount
   b) Axial Entry
   c) T-Root
   d) Finger root
4. **Disks Data**
5. **Mesh Control and Boundary Conditions**
   a) Cover Mesh control
   b) Airfoil Mesh Control
   c) T-Root Mesh Contact and boundary conditions
   d) Disk Mesh Control and boundary conditions

5.2 Operating Conditions of LP turbine

The moving blade of low pressure turbine of a typical steam turbine is considered for the analysis. The operating condition of steam turbine blades are mentioned Table 5.1.

Table 5.1: Operating Condition

Inlet temperature of the moving blade	45^0C
Inlet pressure of the stage	0.37bar.
Exit temperature	65^0C
Exit pressure of the stage	0.20 bar
Power developed by the moving blades	2885.68 KW
Blade Material	X20Cr13
Number of moving blade in the stage	50
Rated speed of the turbine	3000 rpm

Steam turbine LP blade material and their properties used for analysis are given below in the table 5.1.

5.3 Model generation

In model generation the parameter like Number of blades, Speed and its unit are provided.

1. In our analysis the LP blade is unshrouded, hence 'no cover' is selected Radii to the airfoil upstream (leading edge) and downstream (trailing edge) tip locations are given.
2. For the blade of LP Turbine 66 points for each airfoil sections are defined and 14 number of airfoil sections are taken.
3. The blade of LP Turbine that is to be modeled uses a T-root type of attachment.
4. Mapped meshing has been done for entire blade including airfoil, T-Root and disk. The root land is constrained with all DOFs and the movement between root and disk.

Table 5.2: Material Properties

Material	X20Cr13	**C** 0.16 – 0.25 **Cr** 12.00 – 14.00
Mechanical properties	Temperature	20 °C
	Young's modulus (MPa)	210 x 10^3
	Poisson ratio	0.27
	Density (kg/m3)	7.70
	Specific heat capacity at 20 °C (J/kg K)	460
	Thermal expansion (K^{-1})	20–100 °C:10.5 x 10^{-6}
	Yield strength (N/mm2)	760
	Tensile strength (N/mm2)	930
Elevated temperature properties	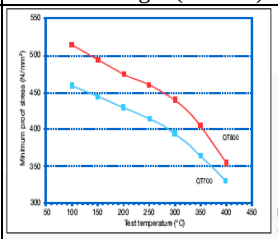 Minimum tensile properties at various temperatures, shown in diagramm, are specified in the EN 10088-3.	

5.4 Generation of FE Model

FE mesh will create a model that contains volumes, areas, lines and key points etc., solid model entities in addition to elements and nodes. Boundary conditions such as nodal coupling, displacement constraints, forces etc. will be applied only in the case of FE model. The option available for generating the 3D FE model is shown in Figure 2.

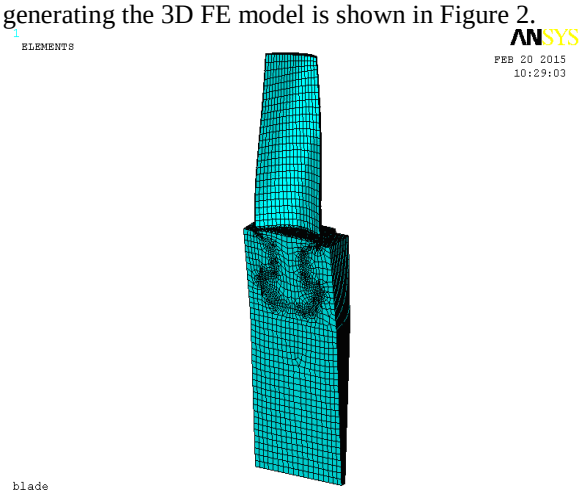

Figure 2: FE mesh model of LP blade

Licensed Under Creative Commons Attribution CC BY

6. Results of Steady State Analysis

The following results are obtained from the above analysis:

6.1 Radial Stress

Radial stress is stress towards or away from the central axis of a component. Figure 3 shows radial stress distribution on last stage of LP turbine blade. At most part of the blade the radial stresses are below 250 MPa (compressive). It is found that in 2-3 elements at root lug locations the peak stress values is around 1680 MPa.

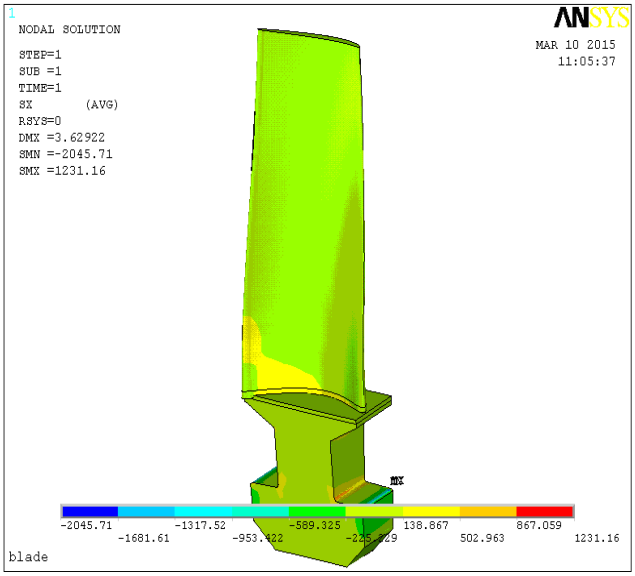

Figure 3: Radial stress distribution

6.2 Circumferential stress

A circumferential stress is a stress distribution with rotational symmetry i.e. which remains unchanged if the stressed object is rotated about some fixed axis. Figure 4. shows circumferential stress distribution on last stage of LP turbine blade. At most part of the blade the radial stresses are below 55 MPa (compressive). It is found that in 2-3 elements at root lug locations the peak stress values is around 815 MPa.

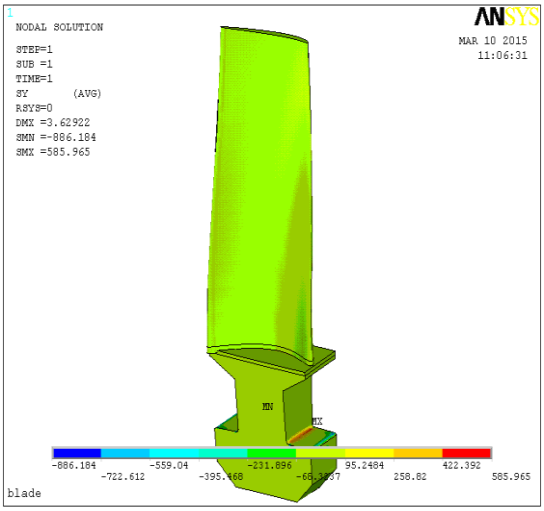

Figuer 4: Circumferential stress distribution

6.3 Axial stress

Figure 5 shows axial stress distribution on last stage of LP turbine blade. At most part of the blade the radial stresses are below 450 MPa (compressive). It is found that in 2-3 elements at root lug locations the peak stress values is around 900 MPa.

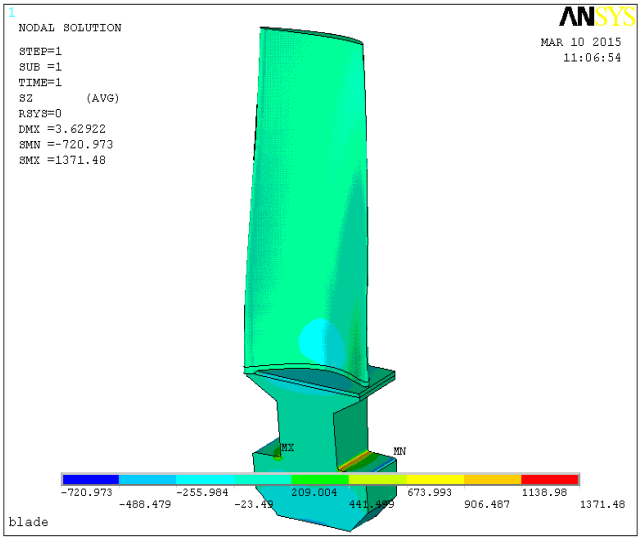

Figure 5: Axial stress

Figure 6 shows max principal stress and Von-mises stress on last stage of LP turbine blade.

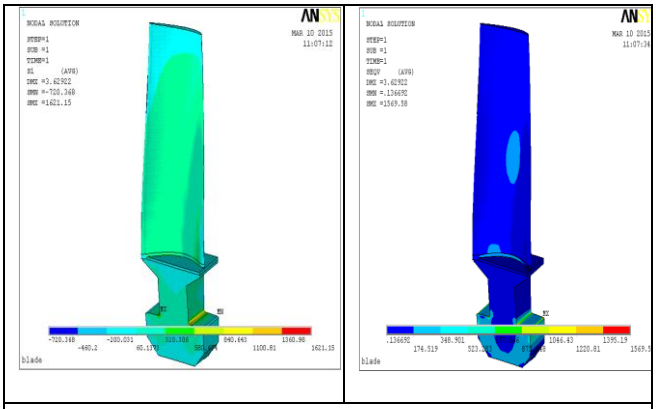

Figure 6: Max principal stress and Von-mises stress distribution

To find out membrane stress and membrane + bending stress at some critical locations, stress categorization is carried out in ANSYS using path plot as follows.

1. A path is created at the root landing, where the peak stress gradient is high and Von-mises stress is analyzed**.** The path plot at the Root landing as shown in Figure 7.

Licensed Under Creative Commons Attribution CC BY

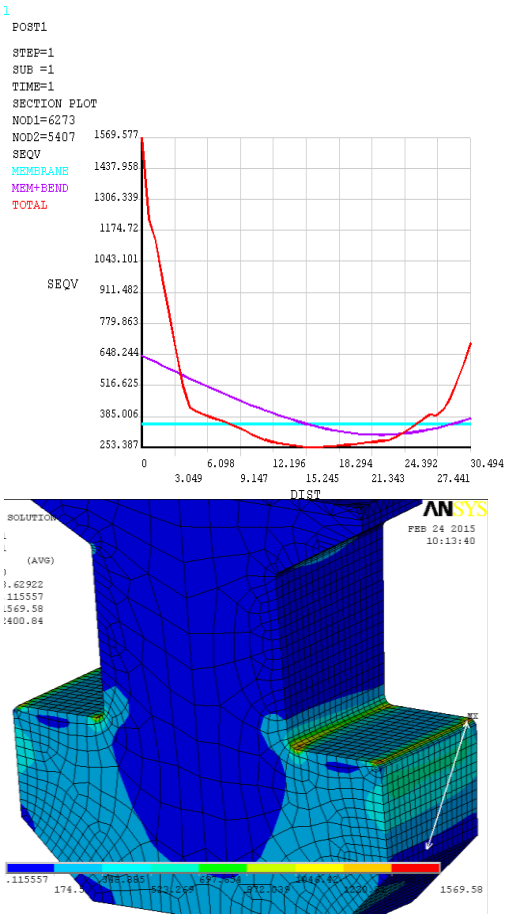

Figure 7: Stress categorization at room landing as shown by arrow

Membrane stress = 351MPa ≤ 507MPa (2/3 of yield strength = (2*760)/3)
Maximum Membrane + Bending stress = 643MPa ≤ 760MPa (Yield strength)

2. A path is created at the root landing, where the peak stress gradient is high and Von-mises stress is analyzed. The path plot at the Root landing as shown in Figure 8.

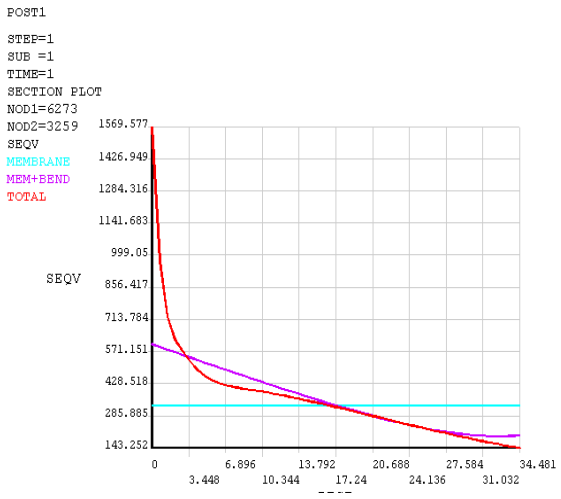

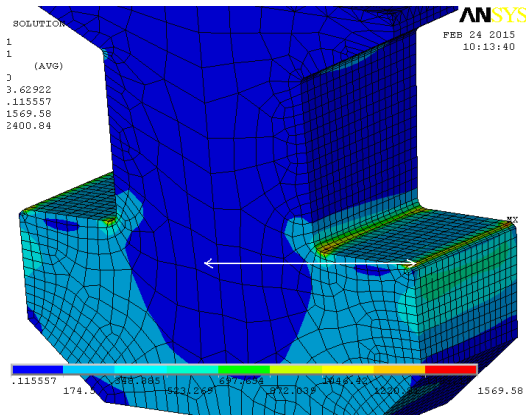

Figure 8: Stress categorization at room landing as shown by arrow

Membrane stress = 305MPa ≤ 507MPa
Maximum Membrane + Bending stress = 601MPa ≤ 760MPa
The results obtained from the stress categorization path plots at the root landing for both membrane stress & maximum membrane + bending stress were found to be within the allowable stress limits. Hence from the steady stress analysis, it is concluded that the blade under consideration is safe from the static stress point of view.

7. Conclusion

Extensive literature survey had been carried out to understand the stress behavior of bladed component of turbo machinery. Finite element stress and modal analysis was carried out for the moving blades of a low pressure steam turbine using customized software, dedicated for analysis of steam turbine blades. 3D blades from the given profile data is generated by stacking 2D profile sections and attaching the root using an easy to use GUI available in the customized software. And also one sector of the disk is modeled in the software and assembly of blade and disk is made. The model of the blade and disk is meshed in the software. Steady state stress analysis of the blade is carried out by applying the centrifugal and aerodynamic loading. Stress categorization at the critical location of the blade root is carried out to find out the membrane and membrane + bending stress at those locations. It is found that the stresses at those locations are lesser than the allowable stress and hence from the steady stress analysis is it concluded that the blade under consideration is safe from the static stress point of view.

References

[1] "A Low Cycle Fatigue Analysis on a Steam Turbine Bladed Disk-Case Study" by **J.C. Pereira**, Mechanical Eng., Dept. – UFSC, Florianópolis, Brazil, **L. A. M. Torres**, Tractebel Energia, S.A. Florianópolis, Brazil, **E. da Rosa**, Mechanical Eng., Dept. -UFSC, Florianópolis, Brazil, **H. Bindewald**, Mechanical Eng., Dept. -UFSC, Florianópolis, Brazil.

[2] "3D Finite Element Structural Analysis of Attachments of Steam Turbine Last Stage Blades" by **Alexey I. Borovkov, Alexander V. Gaev, Computational** Mechanics Laboratory, St.Petersburg State Polytechnical University, Russia.

Licensed Under Creative Commons Attribution CC BY

[3] "Failure analysis of the final stage blade in steam turbine" by **Wei-Ze Wang *, Fu-Zhen Xuan, Kui-Long Zhu, Shan-Tung Tu**, School of Mechanical and Power Engineering, East China University of Science and Technology.
[4] "FAILURE ANALYSIS TO BLADES OF STEAM TURBINES AT NORMAL CONDITIONS OF OPERATIONS AND RESONANCE" by **A.L. Tejeda1, J.A. Rodríguez, J.M. Rodríguez, J.C. García, M.A. Basurto-Pensado**, Centro de Investigación en Ingeniería y Ciencias Aplicadas – Universidad Autónoma del Estado de, Morelos; Av. Universidad, Col. Chamilpa, Cuernavaca, Morelos, México, Centro Nacional de Investigación Desarrollo Tecnológico; Interior Internado Palmira, Col. Palmira, Cuernavaca, Morelos, México.
[5] "Progress With the Solution of Vibration Problems of Steam Turbine Blades" **Neville F. Rieger**, Chief Scientist, STI Technologies, Inc., Brighton-Henrietta TL. Rd. Rochester, New York USA.
[6] "Stress Evaluation of Low Pressure Steam Turbine Rotor blade and Design of Reduced Stress Blade" by **Dr. Arkan K. Husain Al-Taie.**
[7] "Development of Long Blades with Continuous Cover Blade Structure for Steam Turbines" by **Masato Machida, Hideo Yoda, Eiji Saito, Kiyoshi Namura,** Dr. Eng.
[8] "Blade Design and Analysis for Steam Turbines" by **Murari Singh** Ph.D. Gedrge Lucas PB.

Author Profile



Palakuri Vaishaly has received the B.Tech. degree in Mechanical Engineering from Vidya Jyothi Institute of Technology in 2012, and currently pursuing M.Tech at Aurora's Technological and Research Institute, Hyderabad..



B S V Ramarao is working as Associate Professor at Aurora's Technological and Management Academy, Hyderabad. His qualifications are DME- Diploma in Mechanical Engineering, BE in Mechanical Engineering, ME in Automation & Robotics and MBA in Marketing. Currently he is pursuing Ph.D from JNTUH. He is having 15 years of teaching experience for UG and PG students in various Engineering colleges.

Licensed Under Creative Commons Attribution CC BY