International Journal of Science and Research (IJSR)
ISSN: 2319-7064
SJIF (2022): 7.942

SD Hypothesis for Non-Uniform Motion Over Time Intervals: A Theoretical Physics Approach

Souryadeepta Majumdar

[1] Student, BS in Data Science and Applications, Indian Institute of Technology Madras, Chennai 600036, India
Email: *majumdarsouryadeepta[at]gmail.com*

Abstract: ***Considering the frame of Classical and Newtonian Mechanics, the SD hypothesis is a particular case where the magnitude of acceleration of a particle is twice the magnitude of velocity. Previously, considering the instantaneous motion of a particle moving in a straight line under constant acceleration, kinematic factors at a particular instant have been formulated and henceforth have been termed the SD factor of the particular particle. This means that at a time known as SD time, where the SD hypothesis is valid, the kinematic factors of the particle, such as acceleration, velocity, and position at the particular instant (displacement traversed), are all formulated concerning acceleration and time. Now, a theoretical approach is taken further to get into a deeper analysis and find out whether the SD hypothesis can be validated for a long interval or not. Also, the validation is done for uniform motion and constant acceleration. This approach will also conclude whether the hypothesis can be used for non-uniform motion or not. However, linear motion is still considered throughout this approach.***

Keywords: Classical Mechanics, Kinematic Analysis, SD hypothesis, Theoretical Mechanics

1. Introduction

The SD Hypothesis has been dealing with a scenario where the magnitude of acceleration of a particle is twice the magnitude of velocity. The only constraint of this hypothesis is that any instantaneous kinematic factor of the particle, namely acceleration, velocity, and displacement, cannot be zero. Now, it needs to be verified whether it is valid for a long interval or not and whether it is valid for motion with variable acceleration or not. Throughout, the explanation and description will be bound to linear motion. Since this is a theoretical approach to validating this hypothesis in a particular condition of mechanics, statistical analysis will be used in order to support the observations and conclusions. This work will support linear motion, and hence every expression and formula that will be created here will be valid in theory. However, further works will come up that will show the validity of this hypothesis in any type of motion, which will help us to conclude it as a theory and further look into the calorific and thermodynamic aspects of using this theory. It is a point to be noted that all forces and other dynamic factors are still not considered throughout and will slowly get induced with further work. So, only kinematics will be catered to throughout. This particular theory is related to the analysis and study of whether one can achieve the condition where the magnitude of acceleration is twice the magnitude of velocity during accelerated motion. Thorough studies on the thermodynamic and calorimetric requirements that are needed by an engine to provide enough output in order to make the SD hypothesis a valid phenomenon will help in enhancing the automobile industry and space travel. Once this value can be attained through a more cost-effective approach, then designs can be restructured, and fuel conservation and sustainability can also be looked upon.

2. Stability of the condition during an interval of time: A bigger picture

Suppose we consider the fact that the magnitude of acceleration is twice the magnitude of velocity for a given interval of time. Now we need to find, in such a case, what the conditions of velocity, displacement, and time are. Acceleration is still a constant factor, as we are considering uniform linear motion with constant acceleration. Table 1 shows the definitions of symbols that will be used throughout.

Table 1: Declaration of common symbols

Symbol	*Definition*
t_i	time at i-th instant
$\vec{x}$	Displacement vector
$\vec{a}$	Acceleration vector
$\vec{v}$	Velocity vector
t_{SD}	Instantaneous SD time
$\vec{v}_{SD}$	SD velocity
$\vec{a}_{SD}$	SD acceleration
$\lvert\vec{n}\rvert$	Magnitude of any n-vector

Any new variable that will be considered for the expressions, formulae, or equations will be declared during their first usage. Another convention that is followed here is that for a vector $\vec{n}$, its derivative $\frac{d(\vec{n})}{dt}$ is given by $\dot{\vec{n}}$, and for higher derivatives, the number of dot increases. However, when required, the traditional form of declaring derivatives, i.e., $\frac{d(\vec{n})}{dt}$ will be used as well.

2.1 Estimating SD time after a long interval of motion

The most focused parameter in this case is time. The condition of time has been the mainstream estimation for the SD hypothesis since its beginning. For ease of consideration of the time interval where the SD hypothesis is considered valid, it is referred to as an event or interval of the SD phenomenon henceforth. Proceeding to the estimation of SD time in an interval of SD phenomena, we need to keep in mind that the following equation is the backbone of this hypothesis:

$$|\vec{a}|_{SD} = 2 \cdot |\vec{v}|_{SD} \quad (1)$$

Here, we are interested in what happens when a phenomenon is followed for a considerable amount of time. So, we start with analyzing the relations between displacement and velocity during the event. It is given by:

$$|\vec{v}|_{SD} = \frac{|\vec{x}|_{SD}}{t_{SD}\cdot(t_{SD}+1)} \quad (2)$$

Usually, relating velocity and displacement in classical mechanics leads to another equation

$$\vec{v}_{SD} = \frac{d(\vec{x}_{SD})}{dt} \quad (3)$$

or,

$$\vec{v}_{SD} = \dot{\vec{x}_{SD}} \quad (4)$$

Using equation (3) for the velocity vector in equation (2), we arrive at equation (5), which is

$$\frac{d(|\vec{x}|_{SD})}{dt_{SD}} = \frac{|\vec{x}|_{SD}}{t_{SD}\cdot(t_{SD}+1)} \quad (5)$$

Further rearrangement of the equation is done so that the expressions of displacement are on one side and the expressions of time are on another side. Since we have estimations of instantaneous factors, we can consider infinite such instants taking place under a given interval and add them up to observe the condition of that particular interval. Clearly, we use calculus throughout in order to come up with our solution for such an evaluation.

$$\frac{d(|\vec{x}|_{SD})}{|\vec{x}|_{SD}} = \frac{dt_{SD}}{t_{SD}\cdot(t_{SD}+1)}$$

For integrating, we consider that the displacement is from an instant $(|\vec{x}|_{SD})_i$ to an instant $(|\vec{x}|_{SD})_f$ and similarly, time interval is taken from t_i and t_f, where $(|\vec{x}|_{SD})_i$ is the magnitude of displacement at t_i and $(|\vec{x}|_{SD})_f$ is the magnitude of displacement at t_f. Hence, we proceed as

$$\int_{(|\vec{x}|_{SD})_i}^{(|\vec{x}|_{SD})_f} \frac{d(|\vec{x}|_{SD})}{|\vec{x}|_{SD}} = \int_{(t_{SD})_i}^{(t_{SD})_f} \frac{dt_{SD}}{t_{SD}\cdot(t_{SD}+1)}$$

Using the formulae of integration, we get,

$$\ln|(|\vec{x}|_{SD})_f| - \ln|(|\vec{x}|_{SD})_i| = \left(\ln|(t_{SD})_f| - \ln|(t_{SD})_f + 1|\right) - \left(\ln|(t_{SD})_i| - \ln|(t_{SD})_i + 1|\right) \quad (6)$$

Using the division property of logarithm on equation (6), we get,

$$\ln\left|\frac{(|\vec{x}|_{SD})_f}{(|\vec{x}|_{SD})_i}\right| = \left(\ln\left|\frac{(t_{SD})_f}{(t_{SD})_f+1}\right|\right) - \left(\ln\left|\frac{(t_{SD})_i}{(t_{SD})_i+1}\right|\right) \quad (7)$$

The equation can be simplified further in order to make a function where the final SD time can be established as a function of the final SD displacement, the initial SD time, and the initial SD displacement, or

$$(t_{SD})_f = f\left((t_{SD})_i, (|\vec{x}|_{SD})_i, (|\vec{x}|_{SD})_f\right)$$

This creation of such a function land in equation (8), which can be obtained by further usage of the division law of logarithm in equation (7) and is given by:

$$(t_{SD})_f = \left|\frac{(x_{SD})_f\cdot(t_{SD})_i}{(x_{SD})_i(t_{SD})_i+(x_{SD})_i-(x_{SD})_f(t_{SD})_i}\right| \quad (8)$$

Equation (8) can be further simplified to represent final SD time as a function of initial SD displacement and initial SD time. The form can be derived by bringing the equation of SD displacement at an instant as a function of constant acceleration and SD time. Further equations (9) and (10) will be concluded, and collectively, (8), (9) and (10) will provide the final SD time as a function of different parameters. Moving on to the conclusion of equation (9) by replacing the final SD displacement with its expression of acceleration and the final SD time, we get:

$$(t_{SD})_f = \left|\sqrt{\frac{2(x_{SD})_i-2(x_{SD})_i(t_{SD})_i+a(t_{SD})_i}{a\cdot(t_{SD})_i}}\right| \quad (9)$$

Now, in order to obtain a particular equation of time that can help in analyzing the magnitude of the final SD time in terms of the initial SD time, In order to achieve the same, the term representing initial SD displacement can be replaced with the expression that provides its value in terms of constant acceleration and SD time. This leads to a neater version of the SD time equation, which is

$$(t_{SD})_f = \left|\sqrt{2+(t_{SD})_i^2}\right| \quad (10)$$

Plotting the functions on graphs help in analyzing the plots and particular points that may need to be excluded from consideration. Firstly, equation (8) is a function with three variables and, ideally, is plotted in a 4-dimensional projection. However, by fixing any parameter, it turns into a 3-dimensional projection, and furthermore, by fixing two parameters, it becomes a 2-dimensional projection. The plots and explanations are provided further.

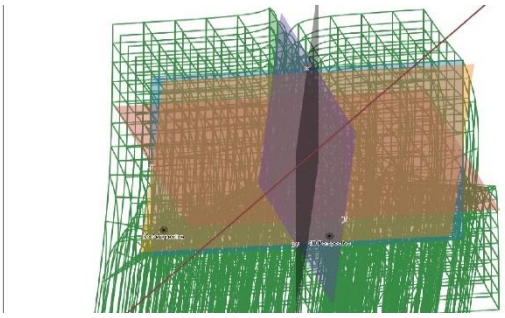


Figure 1: 4-Dimensional projection of final SD time as per equation (8)

Table 2: Axis specifications for Figure 1

Axis	*Representation (variable it caters)*
X	Initial SD time $((t_{SD})_i)$
Y	Initial SD displacement $((|\vec{x}|_{SD})_i)$
Z	Final SD displacement $((|\vec{x}|_{SD})_f)$
W	Final SD time $((t_{SD})_f)$

The graph setup has the following specifications:

- Radius: 5 units
- Subdivisions: 10
- Coordinates: 1
- Grid: 1
- Perspective: 1
- Hyperplanes: 1
- Significant figures: 4
- 3D perspective customization:
  - $\theta_{XY} = 1.42rad$
  - $\theta_{YZ} = 0rad$
  - $\theta_{XZ} = 0.155rad$
- 4D perspective customization:
  - $\theta_{XW} = 1.366rad$
  - $\theta_{YW} = -0.29rad$
  - $\theta_{ZW} = 0rad$

Figure 1 is a dynamic and most generalized view of equation (8). However, if we fix any parameter, in this case, the initial SD time, then we can treat it as a constant, and the rest of the equation can be plotted in 3-dimensional space.

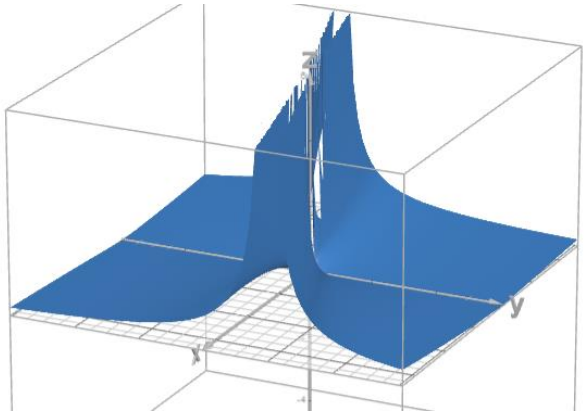


Figure 2: 3-dimensional projection of final SD time as per equation (8)

Table 3: Axis specifications for Figure 2

Axis	*Representation (variable it caters)*
X	Final SD displacement $((\lvert\vec{x}\rvert_{SD})_f)$
Y	Initial SD displacement $((\lvert\vec{x}\rvert_{SD})_i)$
Z	Final SD time $((t_{SD})_f)$

Figure 2 has been plotted by keeping the fixed value of initial SD time as 0.4 seconds.

Further, if we try to provide a two-dimensional projection of the final SD time, we need to fix one more parameter. So, if this case is considered such that all the initial parameters, namely, initial SD time and initial SD displacement, are fixed and treated as constant values, then a 2-dimensional projection can be concluded.

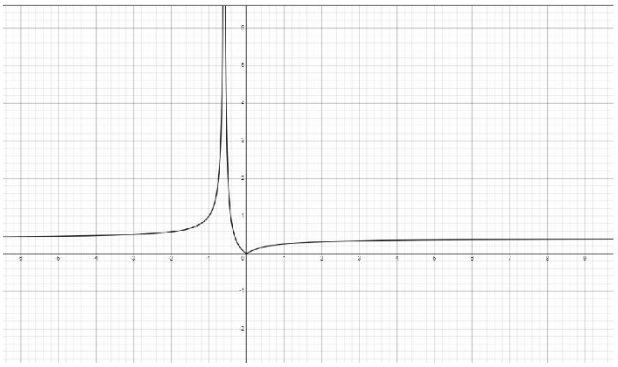


Figure 3: 2-dimensional projection of final SD time as per equation (8)

Table 4: Axis specifications for Figure 3

Axis	*Representation (variable it caters)*
X	Final SD displacement $((\lvert\vec{x}\rvert_{SD})_f)$
Y	Final SD time $((t_{SD})_f)$

For the plotting of Figure 3, the initial SD displacement is considered to be -3.2 units, and the initial SD time is taken as 2.2 seconds.

Now, further considering equation (9) and its plotting, the generalized plot comes under a 3-dimensional space and is provided further.

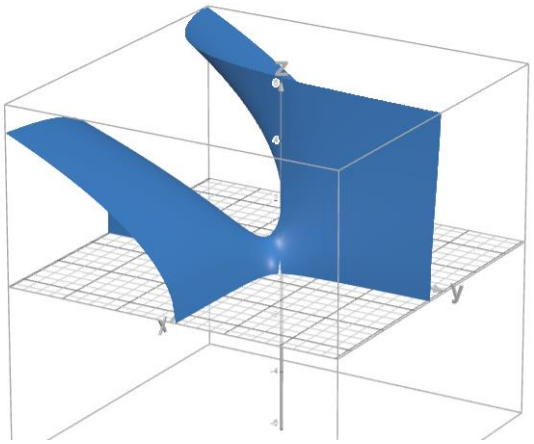


Figure 4: 3-dimensional projection of final SD time as per equation (9)

Table 5: Axis specifications for Figure 4

Axis	*Representation (variable it caters)*
X	Initial SD time $((t_{SD})_i)$
Y	Initial SD displacement $((\lvert\vec{x}\rvert_{SD})_i)$
Z	Final SD time $((t_{SD})_f)$

For plotting of Figure 4, the value of constant acceleration is taken to be 0.4 units per second square. Fixing the initial SD displacement provides the two-dimensional projection of final SD time in terms of initial SD time.

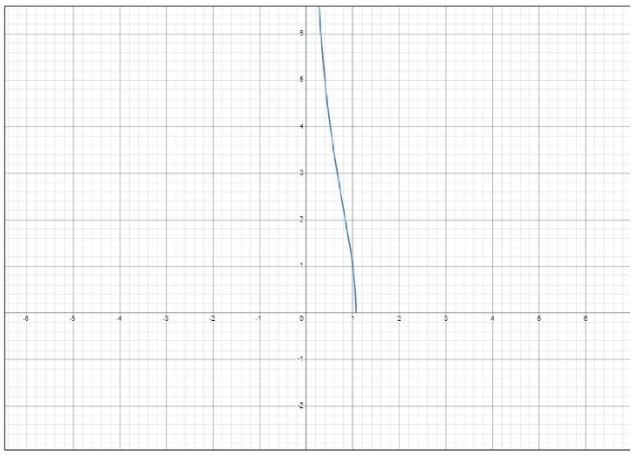


Figure 5: 2-dimensional projection of final SD time as per equation (9)

Table 6: Axis specifications for Figure 5

Axis	*Representation (variable it caters)*
X	Initial SD time $((t_{SD})_i)$
Y	Final SD time $((t_{SD})_f)$

For the plotting of Figure 5, the constant specification is given below:

- Acceleration: 0.4 units per second square
- Initial SD displacement: 3.2 units

The last and the simplest form of relation between initial and final SD time is established in equation (10) where a simple 2-D graph is plotted.

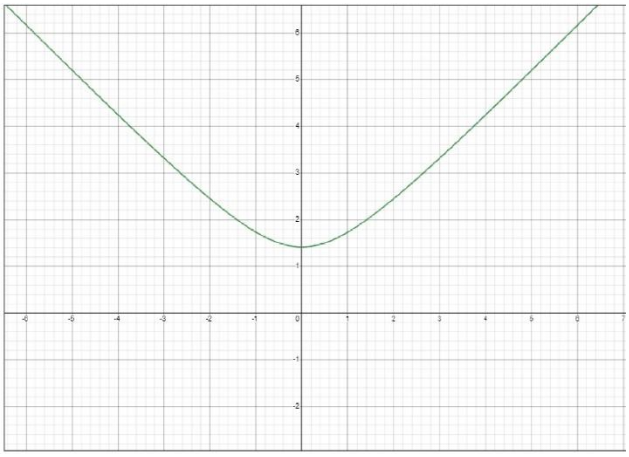


Figure 6: 2-dimensional projection of final SD time as per equation (10)

Table 7: Axis specifications for Figure 6

Axis	*Representation (variable it caters)*
X	Initial SD time $((t_{SD})_i)$
Y	Final SD time $((t_{SD})_f)$

Briefing about the condition of time during the SD phenomenon: time can be expressed in three different forms by varying the independent and dependent variables in the equation. Each equation shows the effect of each variable on time by manipulating their magnitudes. Mostly, the equations are established by relating initial and final SD displacements, SD time, and, in some cases, taking constant acceleration into consideration. One can conclude or observe in the equations and graphs that time is decreasing with an increase in velocity. Although mathematically this can be said to be a valid point, considering a physical setup, it can be seen that SD time proceeds as velocity decreases. This is a reason why in most of the comparisons with displacement, especially clearly visible in Figure 3, as displacement is increasing, time is approaching a constant value, or as time is increasing, displacement is approaching a constant value. Further conclusions and observations will be pointed out and discussed after analyzing the condition of SD displacement and SD velocity further.

2.2 Estimating SD displacement after a long interval of time

After analyzing the condition of time, it is a concern for the pattern of change in displacement of the particle during an SD event. At the instantaneous level, the SD displacement is given by a quadratic equation of time. Now, an observation is needed to observe and judge how the displacement varies over the duration of the event. So, expanding a particular instant to a bigger interval by integrating several instants can help us develop our desired expression. As the instantaneous displacement expression stands,

$$|\vec{x}|_{SD} = \frac{a \cdot (t_{SD} + t_{SD}^2)}{2}$$

Using the basic condition of SD hypothesis, the formula is rewritten in terms of velocity as

$$|\vec{x}|_{SD} = |\vec{v}|_{SD} \cdot (t_{SD} + t_{SD}^2)$$

In terms of derivatives, it is written as,

$$|\vec{x}|_{SD} = (|\dot{\vec{x}}|_{SD}) \cdot (t_{SD} + t_{SD}^2)$$

Or,

$$|\vec{x}|_{SD} = \frac{d(|\vec{x}|_{SD})}{dt_{SD}} \cdot (t_{SD} + t_{SD}^2)$$

Rearranging the terms to keep similar quantities on same side,

$$\frac{d(|\vec{x}|_{SD})}{|\vec{x}|_{SD}} = \frac{dt_{SD}}{(t_{SD} + t_{SD}^2)} \tag{11}$$

Considering that the displacement of a particle is studied between two instants, its initial SD displacement and final SD displacement take place between two instants. Hence, integrating both sides of equation (11),

$$\int_{(|\vec{x}|_{SD})_i}^{(|\vec{x}|_{SD})_f} \frac{d(|\vec{x}|_{SD})}{|\vec{x}|_{SD}} = \int_{(t_{SD})_i}^{(t_{SD})_f} \frac{dt_{SD}}{(t_{SD} + t_{SD}^2)}$$

Simplifying further gives,

$$\ln\left|\frac{(|\vec{x}|_{SD})_f}{(|\vec{x}|_{SD})_i}\right| = \left(\ln\left|\frac{(t_{SD})_f}{(t_{SD})_f + 1}\right|\right) - \left(\ln\left|\frac{(t_{SD})_i}{(t_{SD})_i + 1}\right|\right)$$

This is a repeating part where we have arrived again at equation (7). Further, using the division law of logarithm on RHS and using cross multiplication, final SD displacement

can be derived as a function of initial SD displacement, final SD time, and initial SD time as:

$$(|\vec{x}|_{SD})_f = (|\vec{x}|_{SD})_i \cdot \frac{(t_{SD})_f \cdot ((t_{SD})_i + 1)}{(t_{SD})_i \cdot ((t_{SD})_f + 1)} \quad (12)$$

Using the value of $(t_{SD})_f$ from equation (10) in equation (12),

$$(|\vec{x}|_{SD})_f = (|\vec{x}|_{SD})_i \cdot \frac{\left(\sqrt{2+(t_{SD})_i^2}\right) \cdot ((t_{SD})_i + 1)}{(t_{SD})_i \cdot \left(\sqrt{2+(t_{SD})_i^2} + 1\right)} \quad (13)$$

Simplifying this derives the equation for final SD displacement after a given interval of time, which is,

$$(|\vec{x}|_{SD})_f = \frac{(|\vec{x}|_{SD})_i \cdot (t_{SD})_i \cdot \left(\sqrt{2+(t_{SD})_i^2}\right) + (|\vec{x}|_{SD})_i \cdot \left(\sqrt{2+(t_{SD})_i^2}\right)}{(t_{SD})_i \cdot \sqrt{2+(t_{SD})_i^2} + (t_{SD})_i} \quad (14)$$

Ideally, for displacement, a 3 dimensional and 2 dimensional can help us determine its behavior throughout the event.

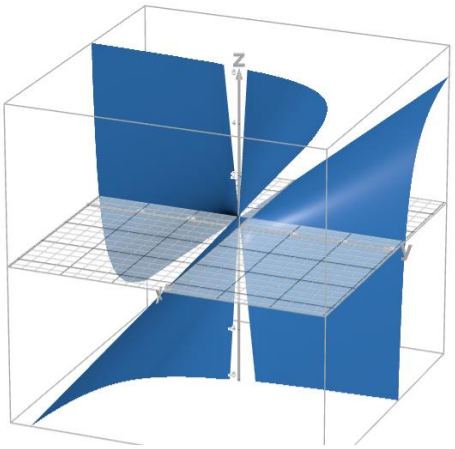


Figure 7: 3-dimensional plot of final SD displacement in terms of initial SD displacement and initial SD time

Table 8: Axis specifications for Figure 7

Axis	*Representation (variable it caters)*
X	Initial SD time $((t_{SD})_f)$
Y	Initial SD displacement $((|\vec{x}|_{SD})_i)$
Z	Final SD displacement $((|\vec{x}|_{SD})_f)$

Figure 7 illustrates the most generalized condition of final SD displacement, where every parameter is varying. However, further, we can either fix initial SD displacement or initial SD time in order to see the variation with one variable.

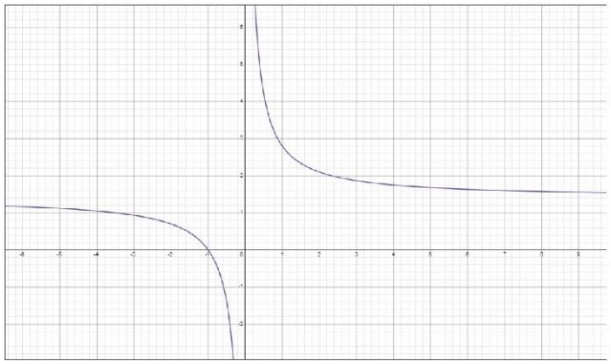


Figure 8: 2-dimensional plot of final SD displacement vs initial SD time

Table 9: Axis specifications for Figure 8

Axis	*Representation (variable it caters)*
X	Initial SD time $((t_{SD})_i)$
Y	Final SD displacement $((|\vec{x}|_{SD})_f)$

For the constant value of initial SD displacement, the value was chosen to be 1.4 units.

Finally, for SD displacement, a plot for relating initial and final SD displacement is shown below

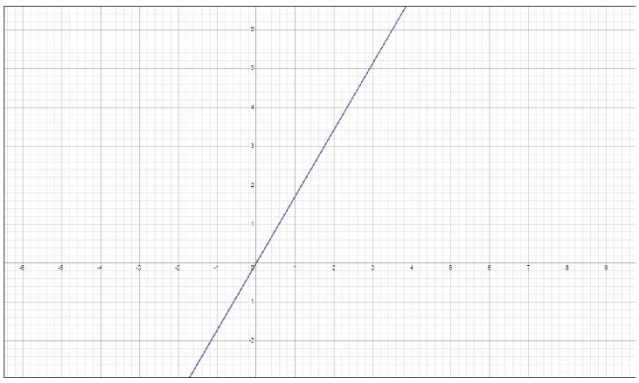


Figure 9: 2-dimensional plot of final SD displacement vs initial SD displacement

Table 10: Axis specifications for Figure 9

Axis	*Representation (variable it caters)*
X	Initial SD displacement $((|\vec{x}|_{SD})_i)$
Y	Final SD displacement $((|\vec{x}|_{SD})_f)$

The value chosen for initial SD time was 1.4 seconds for Figure 9.

As it can be seen from this section, the final SD displacement shows a linear relationship with the initial SD displacement. However, displacement is seen to decrease when time is proceeding. Further, this leads to curiosity about exploring the derived quantity from displacement and time, i.e., velocity. The condition of SD velocity will help us see how we can manipulate SD velocity as per SD displacement and SD time.

2.3 Estimating SD velocity after a long interval of time

After thoroughly analyzing different cases for SD time and SD displacement, it is time for SD velocity to be formulated during a particular interval.

In order to approach SD velocity, the first equation of the SD hypothesis needs to be considered. That means the following equation will be used:

$$|\vec{a}| = 2 \cdot |\vec{v}|_{SD}$$

Writing accelerations in terms of velocity,

$$\frac{d(|\vec{v}|_{SD})}{dt_{SD}} = 2 \cdot |\vec{v}|_{SD}$$

Rearranging like terms on same side, it becomes,

$$\frac{d(|\vec{v}|_{SD})}{|\vec{v}|_{SD}} = 2 \cdot dt_{SD} \quad (15)$$

In this event, it is considered that in the time interval, the initial velocity at the starting time was, whereas the final SD velocity is. Hence, considering these as the limits and integrating equation (15), it is

$$\int_{(|\vec{v}|_{SD})_i}^{(|\vec{v}|_{SD})_f} \frac{d(|\vec{v}|_{SD})}{|\vec{v}|_{SD}} = \int_{(t_{SD})_i}^{(t_{SD})_f} 2 \cdot dt_{SD}$$

As a result of integration, the following equation arrives,

$$\ln\left|\frac{(|\vec{v}|_{SD})_f}{(|\vec{v}|_{SD})_i}\right| = 2 \cdot \left((t_{SD})_f - (t_{SD})_i\right)$$

Transferring from logarithmic form to exponential form,

$$(|\vec{v}|_{SD})_f = (|\vec{v}|_{SD})_i \cdot e^{2\left((t_{SD})_f - (t_{SD})_i\right)}$$

Using the form,

$$(t_{SD})_f - (t_{SD})_i = \Delta t_{SD}$$

The final equation for final SD velocity is

$$(|\vec{v}|_{SD})_f = (|\vec{v}|_{SD})_i \cdot e^{2(\Delta t_{SD})} \quad (16)$$

This can also be written in terms of initial SD velocity and initial SD time by using the expression of final SD time from equation (10). That way, the equation becomes,

$$(|\vec{v}|_{SD})_f = (|\vec{v}|_{SD})_i \cdot e^{2\left(\left(\sqrt{2+(t_{SD})_i^2}\right)-(t_{SD})_i\right)}$$

However, equation (16) is used generally for graphing purpose for easier estimation.

Analysis of the variation of velocity in a chosen interval of time graphically can be done in two forms: one being the three-dimensional plot and the other being the two-dimensional plot. In other words, the three-dimensional scenario will help in understanding the general overview, while taking a proper interval into consideration, one can relate the initial and final SD velocity in a better way.

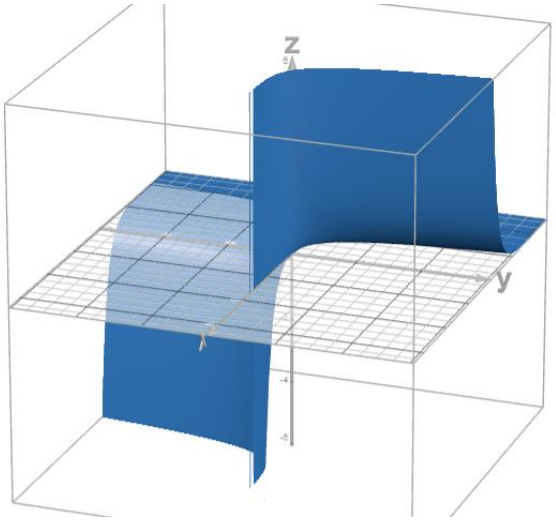


Figure 10: 3-dimensional plot for final SD velocity in terms of SD time and initial SD velocity

Table 11: Axis specifications for Figure 10

Axis	*Representation (variable it caters)*
X	Change in SD time (Δt_{SD})
Y	Initial SD velocity ($(|\vec{v}|_{SD})_i$)
Z	Final SD velocity ($(|\vec{v}|_{SD})_f$)

Fixing the time interval, following is the relation between initial SD velocity and final SD velocity.

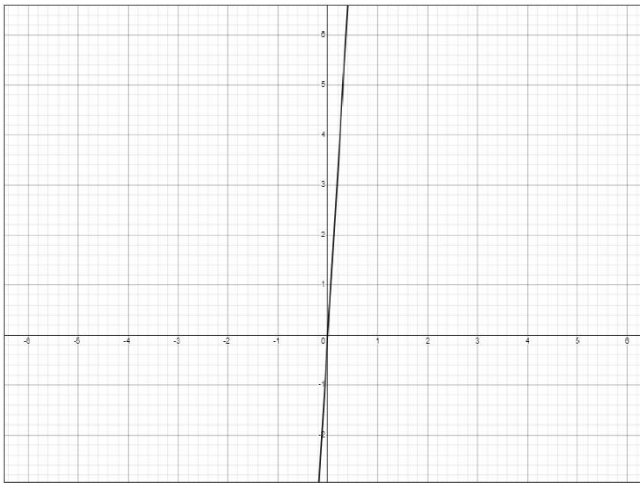


Figure 11: 2-dimensional plot between final SD velocity and initial SD velocity

Table 12: Axis specifications for Figure 11

Axis	*Representation (variable it caters)*
X	Initial SD velocity ($(|\vec{v}|_{SD})_i$)
Y	Final SD velocity ($(|\vec{v}|_{SD})_f$)

The constant time interval was taken to be 0.4 seconds for Figure 11 plot.

Through all the figures and expressions so far, one can conclude that when acceleration is constant, the validation of the SD hypothesis throughout an event remains when the particle is constantly decelerating. However, by analyzing the initial and final components of the parameters, it can be seen that they have a linear relationship with a positive slope. All this is a consideration of the case when there is no external

force acting on it. However, further work will be coming up in the future that will determine its feasibility when an external force helps in making the motion an accelerating motion. Further study can be done in order to confirm the energy and cost requirements for the physical setup of such an experiment, which will definitely help in the upbringing of several engineering mechanisms.

3. Scene of Varying Acceleration: Non-Uniform Motion

Concluding the conditions of uniform linear motion, it could be seen that in uniform motion, this phenomenon can only be validated if and only if velocity is decreasing, and hence the acceleration is negative acceleration. Now the question that comes to mind is: What happens when acceleration varies? For this, a further deep dive is needed where the magnitude-related concept is heavily influenced by vectors and their components. For the discussion of this section, two quantities, namely displacement and time, will be considered. Displacement will be considered a three-dimensional vector, as a three-dimensional perspective is considered a frame of reference. Also, the components are considered as a function of time. For this particular explanation, a simple experimental situation is used, and further attempts are made to generalize it.

For a case-based explanation, let displacement be denoted by the usual reference $\vec{x}$ and is defined by:

$$\vec{x} = At^3(\hat{\imath}) + Bt^2(\hat{\jmath}) + Ct(\hat{k})$$

Here, $\hat{\imath}$, $\hat{\jmath}$ and $\hat{k}$ are Hamilton quaternions. A, B and C are arbitrary variables. Further differentiating displacement vector in terms of time, we get,

$$(\dot{\vec{x}}) = 3At^2(\hat{\imath}) + 2Bt(\hat{\jmath}) + C(\hat{k}) \quad (17)$$

From equation (4), it is known that,

$$(\dot{\vec{x}}) = \vec{v}$$

Using this in equation (17), velocity achieved is of the form,

$$\vec{v} = 3At^2(\hat{\imath}) + 2Bt(\hat{\jmath}) + C(\hat{k})$$

Further differentiating equation (17) in terms of time factor 't', it becomes,

$$(\ddot{\vec{x}}) = 6At(\hat{\imath}) + 2B(\hat{\jmath})$$

Or,

$$(\dot{\vec{v}}) = 6At(\hat{\imath}) + 2B(\hat{\jmath}) \quad (18)$$

From Elementary Mechanics, it is equated that,

$$(\ddot{\vec{x}}) = (\dot{\vec{v}}) = \vec{a}$$

Hence, equation (18) can be re-written as,

$$\vec{a} = 6At(\hat{\imath}) + 2B(\hat{\jmath})$$

From this portion of the events, concept of SD acceleration comes into scenario. Basically, since all the parameters are a function of time, the definition of SD acceleration is the acceleration at SD time. Hence,

$$\vec{a}_{SD} = 6At_{SD}(\hat{\imath}) + 2B(\hat{\jmath})$$

Considering SD event to be valid, the condition of SD time can be estimated in terms of the arbitrary variables A,B and C. Using the condition of SD hypothesis,

$$|\vec{a}|_{SD} = 2 \cdot |\vec{v}|_{SD}$$

Expanding using expressions of SD velocity and SD acceleration in non-uniform motion,

$$\sqrt{36(At_{SD})^2 + 4B^2} = 2 \cdot \sqrt{9A^2{t_{SD}}^4 + 4B^2{t_{SD}}^2 + C^2}$$

Squaring both sides of the above equation and taking all time related terms to one side, keeping the other terms on the other side, the equation becomes,

$$36A^2t_{SD}^4 - (36A^2 - 16B^2)t_{SD}^2 = (2C^2 - 4B^2)$$

Substituting t_{SD}^2 with τ_{SD}, the above equation transforms to

$$36A^2\tau_{SD}^2 - (36A^2 - 16B^2)\tau_{SD} = (2C^2 - 4B^2)$$

Or,

$$36A^2\tau_{SD}^2 - (36A^2 - 16B^2)\tau_{SD} - (2C^2 - 4B^2) = 0 \quad (19)$$

Equation (19) is a quadratic equation, and hence its roots can be found by using the formula for roots of a quadratic equation. This gives,

$$\tau_{SD} = \frac{-\left(-(36A^2-16B^2)\right) \pm \sqrt{\left(-(36A^2-16B^2)\right)^2 - 4\cdot(36A^2)\cdot\left(-(2C^2-4B^2)\right)}}{2\cdot(36A^2)}$$

This can be simplified to,

$$\tau_{SD} = \frac{(36A^2-16B^2) \pm \sqrt{(6A)^4+(4B)^4+(12AC)^2-(96AB)^2}}{72A^2}$$

Substituting the term of τ_{SD} with the real term,

$$t_{SD}^2 = \frac{(36A^2-16B^2) \pm \sqrt{(6A)^4+(4B)^4+(12AC)^2-(96AB)^2}}{72A^2}$$

Hence, the equation of SD time for non-uniform motion comes up to,

$$t_{SD} = \sqrt{\frac{(36A^2-16B^2) \pm \sqrt{(6A)^4+(4B)^4+(12AC)^2-(96AB)^2}}{72A^2}}$$

Plotting t_{SD} as a function of three arbitrary variables, the following 4-dimensional plot is obtained:

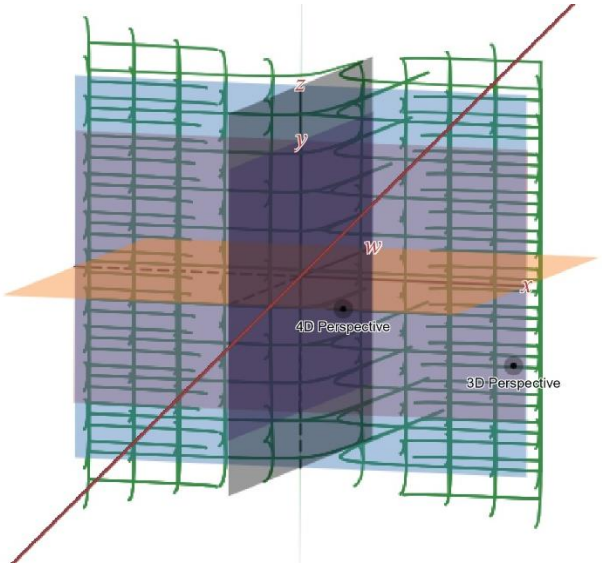


Figure 12: 4-dimensional plot for SD time in non-uniform motion

Table 13: Axis specifications for Figure 12

Axis	*Representation (variable it caters)*
X	A
Y	B
Z	C
W	t_{SD}

Generalizing three-dimensional motion and validating the SD hypothesis on it, all the vector equations are as a function of time henceforth. Further, a relationship between arbitrary variables and the functions will be attained and concluded accordingly.

Starting with displacement vector,

$$\vec{x} = A(f(t))(\hat{\imath}) + B(g(t))(\hat{\jmath}) + C(h(t))(\hat{k})$$

Where f, g and h are three distinct functions of time.
Accordingly, velocity and acceleration vectors are written as,

$$\vec{v} = A(f(\dot{t}))(\hat{\imath}) + B(g(\dot{t}))(\hat{\jmath}) + C(h(\dot{t}))(\hat{k})$$

$$\vec{a} = A(f(\ddot{t}))(\hat{\imath}) + B(g(\ddot{t}))(\hat{\jmath}) + C(h(\ddot{t}))(\hat{k})$$

At SD time,

$$|\vec{a}|_{SD} = 2 \cdot |\vec{v}|_{SD}$$

Or,

$$\sqrt{\left(A(f(\ddot{t}_{SD}))\right)^2 + \left(B(g(\ddot{t}_{SD}))\right)^2 + \left(C(h(\ddot{t}_{SD}))\right)^2} = 2 \cdot \sqrt{\left(A(f(\dot{t}_{SD}))\right)^2 + \left(B(g(\dot{t}_{SD}))\right)^2 + \left(C(h(\dot{t}_{SD}))\right)^2}$$

This can be simplified and written as,

$$A^2\left(\left(f(\ddot{t}_{SD})\right)^2 - 4\left(f(\dot{t}_{SD})\right)^2\right) + B^2\left(\left(g(\ddot{t}_{SD})\right)^2 - 4(g(\dot{t}_{SD}))^2\right) + C^2\left(\left(h(\ddot{t}_{SD})\right)^2 - 4(h(\dot{t}_{SD}))^2\right) = 0 \quad (20)$$

Equation (20) can be used to find the SD time for non-uniform motion for any three given time functions. For non-uniform motion, SD time is the main factor of concern for estimation, and others can be vectorially estimated using conventional methods. However, the existence of the SD hypothesis in non-uniform motion is confirmed by equation (20).

4. Conclusion

Throughout the several ways of finding SD time and validating the SD hypothesis in several conditions of uniform and non-uniform motion, it can be concluded that the SD hypothesis in an inertial frame can only occur when the velocity is decreasing or the particle is approaching the rest phase. However, the application of force varies the scenario and can create an SD event during positive acceleration. However, the energy requirements and concerns on thermodynamic, mechanical, and calorimetric angles need thorough research in order to conclude whether the creation of an SD event is feasible for a mechanism or not. Further works are expected to come up for the same, and once its feasibility is validated, experimental and further industrial arrangements can be made in order to prove this as a physically existing phenomenon. As of yet, this can be validated as a theory.

References

[1] S. Majumdar, "Condition of Time when Acceleration is Twice the Velocity in Linear Motion: SD Hypothesis", International Journal of Engineering Research and Development, XX (2), pp. 57-64, 2024.
[2] H. Parsons, "Motion of Particles Relative to the Earth", The Mathematical Gazette, L1 (377), pp. 239-241, 1967.
[3] S. Golwala "Lecture Notes on Classical Mechanics for Physics 106b," caltech.edu, Jan. 15, 2007. [Online]. Available: https://sites.astro.caltech.edu/~golwala/ph106ab/ph106ab_notes.pdf. [Accessed: Feb. 29, 2024]
[4] "Differentiation Formulas", pas.rochester.edu [Online]. Available: https://www.pas.rochester.edu/~arijit/c02.pdf. [Accessed: Mar. 03, 2024]
[5] D. Morin, "Kinematics in 2-D (and 3-D)," Problems and Solutions in Introductory Mechanics, D. Morin (ed.), Harvard University, 2014.
[6] J. Huerta, "Introducing the Quaternions", ucr.edu, [Online]. Available: https://math.ucr.edu/~huerta/introquaternions.pdf. [Accessed: Mar. 04, 2024]
[7] Nykamp DQ, "Basic idea and rules for logarithms," Math Insight. [Online] Available: http://mathinsight.org/logarithm_basics. [Accessed: Mar. 06, 2024]
[8] McGarva JR., "Non-Uniform Motion by Mechanical Means," Proceedings of the Institution of Mechanical Engineers, Part B: Journal of Engineering Manufacture. CCIX (4), pp. 295-303, 1995.
[9] A. Kaur, Dr. N. Sharma, "A Review on 4D Visualization," International Journal of Engineering Research and Technology (IJERT) ICADEMS. V (3), 2017.

Author Profile



Souryadeepta Majumdar is pursuing his BS in Data Science from the Indian Institute of Technology Madras, Chennai. Having a keen interest in research and physics, he aims to work on the development of new theorems and has coined the term 'SD hypothesis' in his works. Besides a bright career in academics, he has also set heights in entrepreneurial aspects and is the founder and CEO of a fintech startup, showcasing his interest not only in several domains but also his ambition to put his inventions to use in the real world.