International Journal of Science and Research (IJSR)
ISSN (Online): 2319-7064
Index Copernicus Value (2015): 78.96 | Impact Factor (2015): 6.391

A Novel Energy Efficient Approach for Smart Homes Using Real Time Pricing Techniques

R. Raja Prabhu[1], R. Sreevidya[2]

[1]Assistant Professor, Electrical and Electronics Engineering, Imayam College of Engineering, Trichy, Tamilnadu, India

[2]Assistant Professor, Electrical and Electronics Engineering, TRP Engineering College, Trichy, Tamilnadu, India

Abstract: ***This paper proposes a novel approach to energy management system for the demand in power and time sharing scheme for usage in power and reduces the usage of electricity expenses and wastage of energy under power shutdown. It presents the advanced architecture in a home network based on energy management system using smart grid technology. The method of measuring the residence power usage was proposed along with it. The main purpose of the paper reveals the support on customer to reduce the power usage upon cutoff hours and demand periods probably during night hours and the closing stages of that particular month. Hence the real time pricing model was proposed to reduce the usage of power on demand time along the cutoff hours. It achieves the most efficient way of utilizing the appliances in the home management system. The proposed system minimizes the energy usage and reduces the cost with less labor power.***

Keywords: Energy management system, Electricity expenses, Smart grid, Demand hours, Energy shutdown, Real Time Pricing

1. Introduction

The major cause of the increasing cost of electricity and the green energy campaigns to reduce the usage of electricity, there is a growing interest in analyzing power consumption in the household appliances. By measuring the power usage of each and every appliance individually, the need for usage and wastage of energy was calculated accordingly. It shows the detailed information about the energy management system. It presumes which equipment to be switch off and which one to be replaced. By using this method, the consumption of electricity can be reduced. In this way electricity consumption and cost can be reduced. Energy management systems are also used by major business entities to maintain, monitor, measure and control the power demand in loads. Energy management systems can be used to centrally control devices like high voltage units and lighting systems across the household appliances. Energy management systems also provide metering, sub metering, and monitoring functions that allow facility and building managers to gather data and insight that allows them to make more informed decisions about energy activities across the households. To reduce the human error occurs during the traditional billing system, the smart reading meter was used inside the home network. The proposed method will be active in three consecutive process mainly real-time monitoring, stochastic scheduling and real-time control. Our system gives indication when the power flow is too low. In our proposed system, all the devices are controlled by the time based and demand based system when low power is generated. Our system not only reduces the electricity usage and also manages the labor power.

2. Literature Survey

The proposed system presents the home energy management system maintains and summarizes many home networks to responsibilities to maintain most accurate appliances and household devices. The proposed system can sense the various components presents in the household and send the information to the server with the help of active sensor networks along with the sensor and actuator peripherals. The proposed system shows a new routing protocol termed as Disjoint Multi Path based Routing to improve the performance of our ZigBee sensor networks [1].This paper presents a home energy management system based on sensor networks and the power line communication. Home energy management system HEMS is projected as one of the most prominent technologies to persuade the demand that happen during the day to day energy consumption. The proposed home energy management system is used to help the people by accompanying the sensor network with more appropriate and energy efficient power making technology. The proposed system describes the home energy management system HEMS an active mechanism which provides the efficient optimization and analysis for energy consumption easily available to control the household appliances by means of smart network with available sensor networks [2]. This paper involves the process under the integration of Digital Addressable Lighting Interface devices in wireless sensor networks. The building automation system deals with the different kinds of equipments like HVAC systems, automatic and lighting control, buzzers and room ventilation systems [3]. This paper presents system architecture for load management in smart home management system that maintains the individual demand prediction among the smart grid technology. The proposed structure was composed of four different modules for easy balancing, control techniques, demand time management and different energy sources for maintaining and allocating for easy access and control over them [4]. The operating procedure and the energy consumption details are provided by the real time metering and power line communication systems. The proposed system enables the resonant type wireless power transmission system useful for HEMS due to the high power transmission within the short time range using the sensor power network system. The formula of transmitting power efficiency in the system was studied with the help of real time metering which occurred in the stimulating and resonating coil [5]. The Proposed system offered in this

Licensed Under Creative Commons Attribution CC BY

DOI: 10.21275/ART2017625

paper focuses on the Demand Research by scheduling and controlling the house hold appliances available in the process flow units to allow the demand for residential loads. A new system is designed to allocate the time schedule to use the household appliances for the purpose of saving energy consumption and reduce the demand for energy used by the client [6]. This paper focuses on the complete and common techniques related home energy management system which involves the classification of several devices like deferrable, curtail able, thermal and critical ones. To describe the effective implementation of the proposed system the simulation of data was carried out and the various predominant studies were analyzed [7]. The proposed system manages the household appliances and suggests the customers not to use the power during the cutoff and the peak or demand hours and to use the energy during the day end and the periodic month ends. The power levels are to be maintained at the particular limits to the determined priority levels. The proposed system will obtain the data from the primary side for the purpose of demand research. The aim of the paper presented in the system is to motivate the consumer to us energy during the night time and weekends [8]. This paper proposes the process of reducing the cost of energy conversion by the real time pricing techniques for smart home energy efficient system. This paper presents the algorithm which is useful for many automation applications. This project clarifies the design involved in the prototype of the real time pricing techniques [9]. This proposed paper presents the real time implementation of the real time pricing techniques in the wireless sensor networks which reduce the cost of the prototype types, power flow and chip size along with the limitations of the module. The system's procedure was involved in the minimization of the daily usage of the electricity charge and the variation in the controlled levels of the price variations to the customer's satisfaction [10]. This paper proposes energy efficient management system for smart homes using the sensor wireless network depends upon the Bluetooth technology for communication among the household appliances along with the home energy management software scheme. The present system focuses on the energy consumption and the power rating during the demand hours of the household appliances and the electricity charges to the consumers [11]. This paper mainly concerns with the design of smart home management system based upon the power line communication systems. Power line communication technology is essential for various non-automatic control applications. The proposed home energy management systems are unique since it found out the dissimilarities in the real time pricing techniques and power consumption model of various household appliances [12].

3. Proposed System

The proposed system shows the real time pricing system based on which the time sharing scheme to measure the amount of energy is wasted can be calculated. It also shows the power consumption during the peak hours in the GSM Module. The substation was linked with the wireless technology through the zigbee device. The consumed power was calculated and sends back to the substation. The proposed block diagram was shown in Fig.1 below.

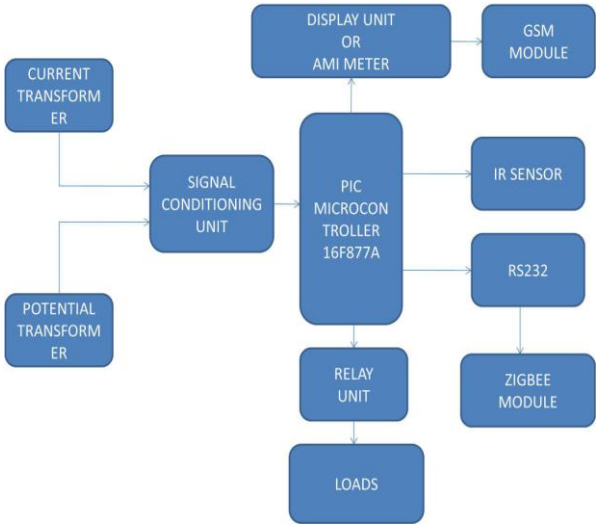

Figure 1: Block diagram of the proposed system

4. Software Description

4.1 MPLAB IDE (Compiler)

The Embedded C program for the necessary control operation of the PIC microcontroller is written using the MPLAB Software and Program is complied to detect the error in the coding.

4.2 Proteus 8 Professional

It is used to verify the proper operation of our proposed system through simulation. Initially, all the devices are connected according to the circuit diagram and then the Embedded C coding is dumped in the microcontroller for necessary operation of the controller

5. Simulation Result

The simulation result shows the energy consumed and the amount through the PROTEUS software application. It links the output load through the bulb, during the peak hours the motor is to be shutdown and the bulb will glow automatically thus reducing the energy consumption during the peak hours. Then during the nominal time period the motor runs along with the lamp. Thus the proposed system shows the consumption of energy and the reduced labor power during the peak and the demand time.

Licensed Under Creative Commons Attribution CC BY

DOI: 10.21275/ART2017625

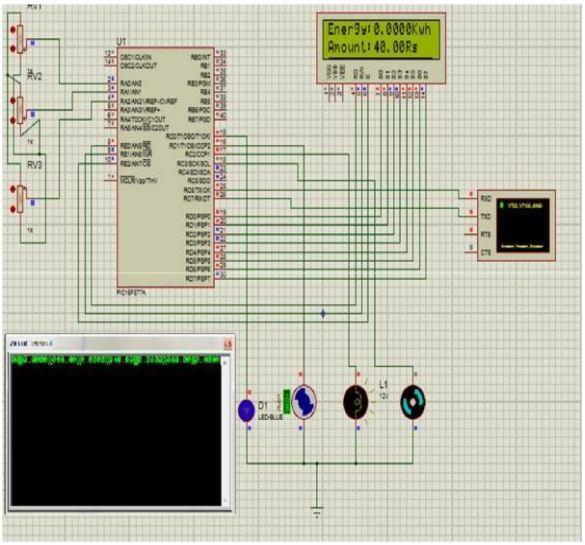

Figure 2: Simulation result of the proposed system



Figure 4: GSM module preview result

6. Hardware Implementation

The hardware implementation of the proposed system shows the two smart meter, the zigbee device, the GSM module, PIC microcontroller, sensors and the signal conditioning units. The smart meter readings are set through the GSM module, which shows the energy consumption during the peak hours as well as the entire energy flow during the whole month. Setting the limit value shows the power consumption limit. When it exceeds the set off values, then the meters will turnoff. It happens during the peak and demand hours.

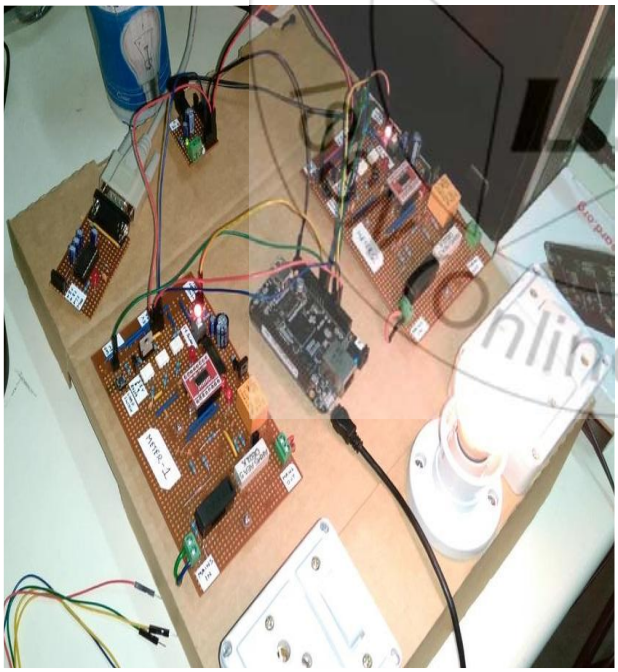

Figure 3: Hardware diagram of the proposed system

7. Conclusion

This paper proposed an energy efficient approach using the real time pricing techniques along with the GSM module for smart home management systems. The simulation output of the proposed system realizes the real time energy pricing in the module depends upon the energy usage on the particular month or day. The hardware results of the proposed system shows the energy can be saved when the power is either high or low depending upon the distribution system which is connected to the substation. The set value was shown in the GSM module to measure the energy consumed during the peak and the demand hours. It helps to keep the home appliances woks more efficiently than never before. However the proposed system finally benefits the customer with more energy consumption with less demand in labor power and less amount to pay to the EB office.

References

[1] Cynthujah Vivekananthan, Student Member, IEEE, Yateendra Mishra, Member, IEEE, and Fangxing Li, Senior Member, IEEE," Real-Time Price Based Home Energy Management Scheduler," IEEE TRANSACTIONS ON POWER SYSTEMS, VOL. 30, NO. 4, JULY 2015.

[2] Mario Collotta, Member, IEEE, and Giovanni Pau," A Novel Energy Management Approach for Smart Homes using Bluetooth Low Energy," IEEE JOURNAL ON SELECTED AREAS IN COMMUNICATIONS, VOL. 32, NO. 06, SEPTEMBER 2015.

[3] Serene Althaher, Student Member, IEEE, Pierluigi Mancarella, Senior Member, IEEE, And Joseph Mutable, Senior Member, IEEE," Automated Demand Response from Home Energy Management System under Dynamic Pricing and Power and Comfort Constraints," IEEE TRANSACTIONS ON SMART GRID, VOL. 6, NO. 4, JULY 2015.

[4] Mingfu Li and Hung-Ju Lin," Design and Implementation of Smart Home Control Systems Based on Wireless Sensor Networks and Power Line

Licensed Under Creative Commons Attribution CC BY

DOI: 10.21275/ART2017625

Communications," IEEE TRANSACTIONS ON INDUSTRIAL ELECTRONICS, VOL. 62, NO. 7, JULY 2015.
[5] Dhinakar P1, John Clement Sunder A2, Ramesh S M3, Vignesh Kirubaharan D4," Load Measurement in Home Energy Management System with Demand Response," International Advanced Research Journal of Science, Engineering and Technology Vol. 1, Issue 3, November 2014.
[6] P. Dhinakar A. John Clement Sunder, S. M. Ramesh D. Vignesh Kirubaharan," Demand Response Based Home Energy Management System," International Journal of Advanced Research in Electronics and Communication Engineering (IJARECE) Volume 3, Issue 11, November 2014.
[7] Yusuf Ozturk, Senior Member, IEEE, Datchanamoorthy Senthilkumar, Member, IEEE, Sunil Kumar, Senior Member, IEEE, and Gordon Lee, Senior Member, IEEE," An Intelligent Home Energy Management System to Improve Demand Response," IEEE TRANSACTIONS ON SMART GRID, VOL. 4, NO. 2, JUNE 2013.
[8] Takashi Yoshikawa and Shota Saraya," HEMS Assisted by a Sensor Network Having an Efficient Wireless Power Supply," IEEE TRANSACTIONS ON MAGNETICS, VOL. 49, NO. 3 MARCH 2013.
[9] Giuseppe Tommaso Costanzo, Student Member, IEEE, Guchuan Zhu, Member, IEEE, Miguel F. Anjos Member, IEEE, and Gilles Savard," A System Architecture for Autonomous Demand Side Load Management in Smart Buildings," IEEE TRANSACTIONS ON SMART GRID, VOL. 3, NO. 4, DECEMBER 2012.
[10] Francisco Jose Bellido-Outeirino, Member, IEEE, Jose Maria Flores-Arias, Member, IEEE, Francisco Domingo-Perez, Aurora Gil-de-Castro and Antonio Moreno-Munoz, Senior Member, IEEE," Building Lighting Automation through the Integration of DALI with Wireless Sensor Networks," F. J. Bellido-Outeirino et al.: Building Lighting Automation through the Integration of DALI with Wireless Sensor Networks.
[11] Young-Sung Son, Topi Pulkkinen, Kyeong-Deok Moon and Chaekyu Kim," Home Energy Management System based on Power Line Communication," IEEE Transactions on Consumer Electronics, Vol. 56, No. 3, August 2010.
[12] Due-Man Han and Jae-Hyun Lim Member, IEEE," Design and Implementation of Smart Home Energy Management System based on ZigBee," IEEE Transactions on Consumer Electronics, Vol. 56, No. 3, August 2010.

Author Profile



R.Raja Prabhu received the B.Eng (I) in Electrical and Electronics Engineering from Anna University, Chennai in 2005. He completed the M.Eng (I) in Applied Electronics from Anna University, Coimbatore in the year 2009. He is now working as assistant professor in the department of electrical and electronics engineering in Imayam College of Engineering, Trichy, India. His area of interest includes power electronic converters, power factor correction, energy conversion and renewable energy applications.



R. Sreevidya was born in the state of tamilnadu, India. She received the BE degree in Electrical and Electronics Engineering from Anna University, Chennai in 2010 and ME degree in Power Electronics and Drives from Anna university, Chennai in 2014. She is now working as assistant professor in the department of electrical and electronics engineering in TRP Engineering College, Trichy, India. Her research interest includes converters, photovoltaic system efficiency, renewable energy systems and energy conversions.

Licensed Under Creative Commons Attribution CC BY

DOI: 10.21275/ART2017625