International Journal of Science and Research (IJSR)
ISSN (Online): 2319-7064
Index Copernicus Value (2015): 78.96 | Impact Factor (2015): 6.391

Current Trends in Indirect Solar Dryer: A Review

Jeevan R. Gaikwad[1], Dr. Pramod V. Walke[2]

[1]Student, M.Tech. Heat Power Engineering, G. H. Raisoni College of Engineering, Nagpur, India- 440016

[2]Head of Mechanical Engineering Department, G. H. Raisoni College of Engineering, Nagpur, India- 440016

Abstract: ***Due to limited availability of fossil fuels, Mankind has to move towards renewable energy source and solar energy consumes great fraction of it. Therefore, lot of research is going on effective utilization of solar energy. Drying is an important thermal application of solar energy that is the moisture removal process from the product by simultaneous mass and heat transfer by heating the air around it to carry out vapor along it. Because of solar radiations are not available continuously the commercial use of solar dryer is limited. Therefore, researchers have presented different design modifications along with different thermal storage media in order to improve solar dryer performance. This review presents the various types of solar dryers and recent work done on solar drying technology to improve their performance.***

Keywords: Indirect solar dryer, thermal storage, phase change material, desiccant, solar collector, drying chamber

1. Introduction

Drying is getting importance with time to reduce wastage of food products, which generally occurs due improper food processing, and lack of storage facilities. To reduce such wastage we have found some effective storing techniques. From thousands of years sun drying being used to dry the agricultural products but there are many problems associated with it such as color change due to uneven drying, change of taste and external contamination and degradation due to wind blow and other factors. To overcome these bottlenecks first solar dryer developed in 1976, which was box type dryer with transparent cover to overcome these bottlenecks [1].

Moisture removal from product occurs into two stages, first stage is shifting the moisture from internal part near to surface and second stage is evaporation of moisture from surface to carry it with air. Moisture removal process depends on internal parameters like physical nature (porous material, density factor), chemical composition, and surface roughness and its size and external parameters like air temperature, relative humidity of air and airflow [2].

A. Stegou-Sagia et al. [3] studied the various drying effect of different drying conditions, which affect the drying process. He also studied the various mathematical models for study of Mushroom drying process. To study drying process of mushroom slices used two different drying methods that is fluidized bed and cabinet dryer with varying slices thickness, varying air temperature and air velocity. He found that with increase in drying temperature and air velocity reduces the drying time.

V. Shrivastava et al. [4] stated that convective heat transfer coefficient is an important parameter in solar dryer system design. He has done the heat transfer modelling to compare heat transfer coefficients of open sun drying and indirect sun drying. From study, it is concluded that heat transfer coefficient is depends on drying time and it decrease with it as moisture content reduces with drying time. Also convective heat transfer coefficient is higher in indirect solar drying compared with open sun drying.

2. Classification of Solar Dryer

Solar dryers are classified in two main groups depending on air movement around drying product first one is natural circulation or passive dryer where air movement takes place due to density difference and forced circulation or active dryers which occurs with the help of fans or blowers[5]. Generally, forced circulation gives higher rate of drying than the natural circulation dryer.

A. EI-Sebali et al. [6] classified dryer into four types depending on energy transfer mechanism used to remove moisture from product as follows:

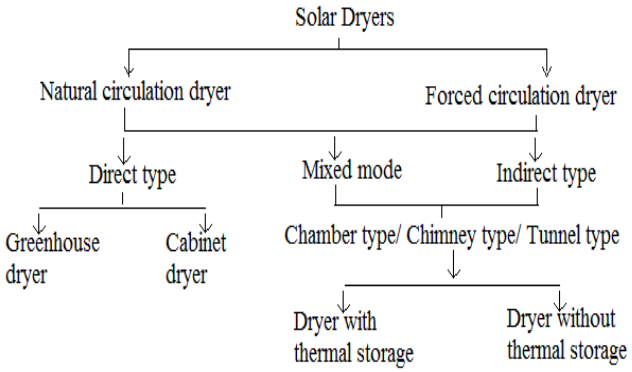

Figure 1: Classification of solar dryer

1) Open drying: Drying products directly placed under sunlight on open space and subjected to direct solar radiations, atmospheric temperature, atmospheric relative humidity and open wind speed for drying purpose.
2) Direct solar dryer: In this, products to be dried placed in closed cabinet on which direct solar radiations enter through transparent glass and heat is absorbed by product itself and surrounding surfaces of drying cabinet.
3) Indirect solar dryer: In this process occurs in two steps, first air heated inside solar collector and then supplied to drying chamber.
4) Mixed- Mode solar dryer: Products dried by combined mechanism of direct and indirect method. Product placed under direct solar radiation along with heated air supplied from collector.

Licensed Under Creative Commons Attribution CC BY

3. Previous Work on Indirect Solar Dryer

Lucia-Blanco et al. [7] given the mathematical model for evaporation of free water occurs in solar dryer. They found that drying capacity is function of temperature and humidity of entering air to drying chamber. They also studied that aspect ratio of drying chamber is important factor in maximizing the evaporation rate or pick-up efficiency. Drying capacity and evaporation rate depends on mass flow rate and on aspect ratio, which should kept between 200-300, is suitable for maximum evaporation rate.

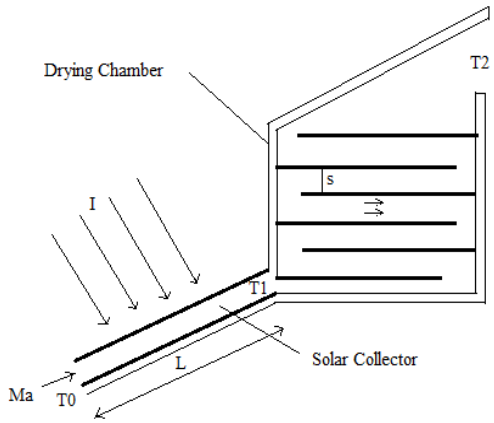

Figure 2: Indirect Solar Dryer

Adrian et al. [8] stated that drying system contains two parts air heater and drying cabinet. Setup consists of two fans at the inlet to collector and outlet to dryer. Collector inclination was 23.5^0 to absorb maximum solar radiations. This arrangement achieved the maximum air temperature of about 98.8 0Cunder static air condition and 62.8 ^{0}Cfor forced air condition inside the chamber. Experiment carried out to dry 12 Kg of banana slices from 80% moisture content to 15% in 17 hours without color loss. It is conclude that for this solar dryer overall efficiency is higher. At the top area of cabinet gives better quality than bottom one.

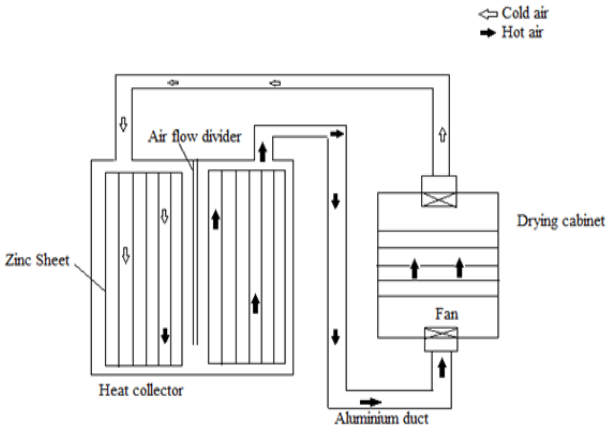

Figure 3: Airflow inside solar dryer

Vinay Hegde et al. [9] evaluated the performance of solar dryer for drying banana as it high in production in Indian Territory. He studied the different arrangements of airflow for solar flat plate collector that is top flow (with airflow between absorber plate and glass cover) and bottom flow (with airflow between bottom insulation and absorber plate) with different airflow rates between 0-3 m/s. setup uses two different trays, wooden skewer and conventional trays. It observed that bottom flow gives 2.5 ^{0}C more temperature in chamber compared to top flow. Bottom flow gives efficiency about 38.21% and top flow gives 27.5%, which is higher than top flow. Near about 60 W energy is saved in bottom flow. It also concludes that wooden skewer gives higher drying rate than conventional tray. Dried banana had better quality when mass flow rate is about 1 m/s compared to 0.5 m/s and 2m/s.



Figure 4: Setup for solar drying system

Chandrakumar Pardhi et al. [10] constructed a mixed mode solar dryer with smooth and rough plate solar collector having forced convection. It is found that thermal performance of collector with smooth surface was poor with some artificial ribs on absorber plate improves the thermal performance by enhancing the heat transfer. Maximum temperature attained in dryer without load is about 69.2 ^{0}C and with loading 3 Kg of grapes it was 62.1 ^{0}C and drying time reduced to 4 days compared to 8 days of conventional open sun drying.

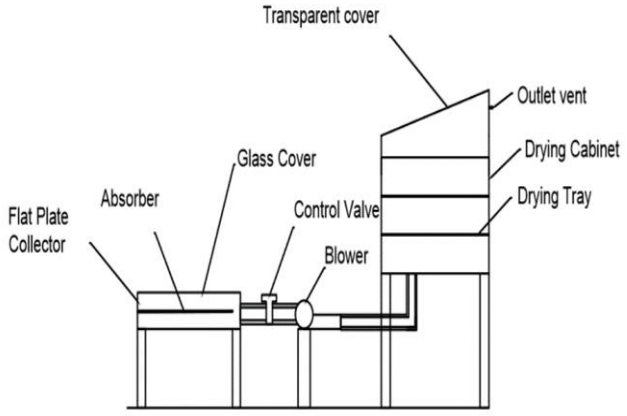

Figure 5: Schematic for mixed mode solar dryer

B. M. A. Amer et al. [11] constructed a new hybrid solar dryer, which acts as a solar dryer during sunny days and act as hybrid solar dryer in cloudy days. This dryer also works in off sunshine hours that is after sunset with the help of heat energy stored in water during daytime, which is about 15 ^{0}C and with the help of electric heater. An arrangement also provided for recycling of about 65% of exhaust air to increase the efficiency of system. The dryer was able to dry 30 Kg of banana slices from 82% moisture content to 18% moisture content on wet basis in 8 hours. Compared to open drying it only reached to 62% and for same time quality of

Licensed Under Creative Commons Attribution CC BY

dried banana in terms of color, texture and aroma was better in in new hybrid system.

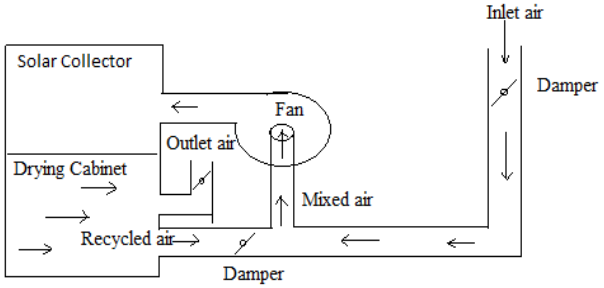

Figure 6: Hybrid solar dryer

R. K. Jain et al. [12] given the analytical study of multi pass air heater based on solar energy to dry paddy crop with deep bed dryer. Air heater is having built in thermal storage. Experiment done at Delhi in month of October. Air heater performance studied based on temperature gain of air by varying tilt angle, dimensions of collector and mass flow rate of air. Rate of moisture removal and drying air humidity compared with respect to drying time for various depth of drying beds. Researcher found that moisture removal rate and air humidity increases with increase in drying bed depth.

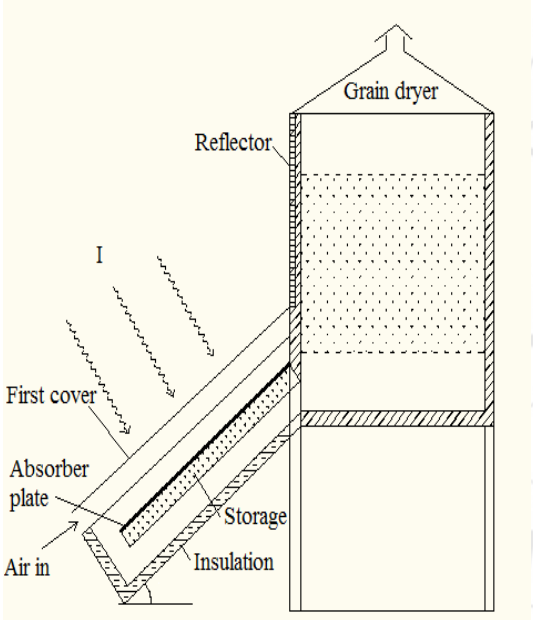

Figure 7: Multi-pass air heater with in-built thermal storage

4. Solar Dryer with Desiccant as Thermal Storage

Wisut chromsa-erd et al. [13] evaluated the performance of solar drying having desiccant bed. Setup uses silica gel bed as a dehumidification system to decrease the drying air humidity continuously. Arrangement consists of three silica gel beds with width 0.55m, 0.95m in length and 0.01m thick and a collector of area with 17^0 tilt angle. Top SGB bed gives highest adsorption rate about 0.073 Kg of water per hour than west SGB that is about 0.062 Kg of water per hour with lowest in east SGB about 0.032 Kg of water per hour. Experimental study consists of performance study of two systems that is solar drying with dehumidification and without dehumidification. It stated that temperature, humidity and mass flow rate are important characteristics, which affect the dried product quality. Both mas flow rate and air temperature determines the drying time. At higher temperature capacity of silica gel to absorb moisture decreases and there is limit on maximum drying temperature, which depends on type of product to be dried. Adsorption rate of silica gel is inversely proportional to temperature and directly proportional to humidity ratio of air. Lesser the moisture content air gets heated earlier and able to carry more moisture than air with high moisture content. It found that drying time with dehumidification system is about 20.83% lesser than drying without dehumidification system.

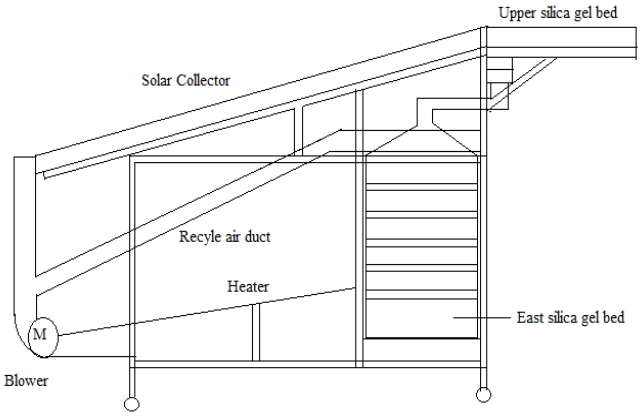

Figure 8: Solar Dryer consisting of three desiccant bed

V. Shanmugan et al. [14] developed and tested indirect dryer with desiccant in forced circulation mode. Desiccant used in the form of bed and forced circulation maintained with the help of centrifugal blower. During daytime hot air is supplied to drying chamber through flat plate air heater and desiccant bed is regenerated by solar radiations obtained directly and from reflective mirrors. System designed to dry 20 Kg of pineapple slices and green peas. Researcher found the by use of reflective mirror with desiccant increases drying capacity by 20% thus reduce total drying time. It is found that drying efficiency of system is between 43% to 55% and 60% moisture is removed by drying air and remaining by desiccant material.

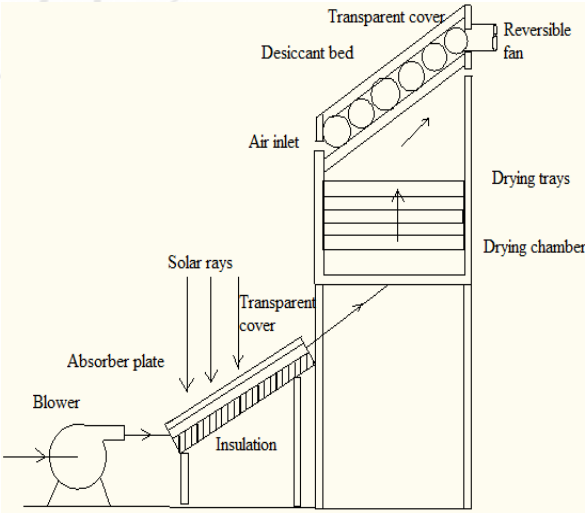

Figure 9: Solar dryer with desiccant bed

Sari Farah Dina et al. [15] studied the performance of continuous type of dryer with desiccant as a thermal storage

Licensed Under Creative Commons Attribution CC BY

for cocoa deans drying. Researcher studied that two different desiccant with molecular sieve Na-X Zeolith as an adsorbent type and $CaCl_2$ as ad absorbent type. During sunshine hours, maximum temperature obtained is between 40-54 ^{0}C that is with average temperature 9-12 ^{0}C higher than the ambient temperature. During sunshine time humidity inside dryer was lower than outside ambient. He got specific energy consumption was 60.4 MJ/Kg of moist product for direct sun drying, 18.29 MJ/Kg for solar drying integrated with adsorbent material and 1.29 MJ/Kg for absorbent on moist weight basis. From that, he concluded that solar drying using desiccant, as thermal storage is efficient in consideration with drying time and specific energy consumption.

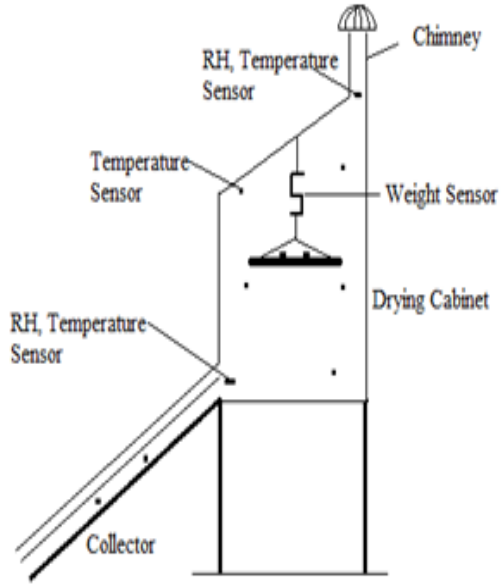

Figure 10: Location of various sensors inside Solar Dryer

A. E. Kabeel et al. [16] developed a solar dryer system to remove the humidity from air before it enters the solar collector using a continuously rotating desiccant wheel. Desiccant wheel able to reduce humidity from 15 grams of water per Kg of dry air to 8.8 grams of water for that optimal wheel speed needed as 15 revolution per hour. Dry air temperature increased to 80 ^{0}C and about 153% overall heat gain higher than system without desiccant wheel by removing the moisture entering the system. This system increases drying capacity as it can absorb more moisture in drying chamber there by reducing drying time.

5. Solar Dryer with PCM as Thermal Storage

A. K. Shrivastava et al. [17] studied feasibility of thermal storage material to store and release energy for solar drying application using Lauric acid as phase change material. In drying application heat losses are due to air leakage in dryer sides and because of lesser heat recovery. He studied heat transfer phenomenon for discharging and charging time for phase change material studied the effect of air velocity and hot air temperature on charging and discharging time. In result, he stated that collector efficiency varies between 9.3 to 52% with average of 24.09% whereas efficiency of dryer varies between 9.8 to 26% with an average of 17.53%. It concluded that efficiency of dryer and collector varies along the intensity of irradiations.

Vikas shringi et al. [18] defines the drying is the moisture removal process due to continuous mass and heat transfer. He has done the analysis of solar drying integral with PCM. He found that temperature of solar fluid increases with solar radiation also stated that moisture variation in product is depend on time with first 3-hour reduction in moisture from 55.5% to 19.9% (w. b.) and 15.63 to 6.49 % (w. b.) in last 5 hours. He concluded that best temperature for drying garlic clove is about 65 ^{0}C. It concluded that energy and exergy efficiency could improve through reduction of heat losses.

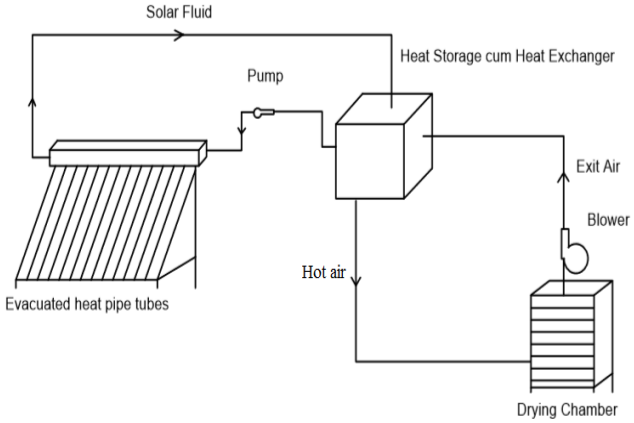

Figure 11: Indirect Solar dryer with PCM

Dilip Jain et al. [19] constructed crop drying using thermal storage to continuously dry herbs. Collector made up of packed bed of PCM material and drying chamber with natural circulation collector chosen of 1.5 m^2 area and drying chamber consisting of six number of drying trays with 0.50*0.75 m^2 area to dry 12 Kg of herds leaves. PCM used in packed bed form in dryer itself of 50 Kg quantities inside the tubes. Packed bed acts energy storage during sunshine hour and releases energy during off sunshine hour. He found that dryer was working for 5-6 hours after sunset for this particular system with 6 ^{0}C higher temperature over surrounding air temperature. Study carried out at Jodhpur in month of June. It found that thermal efficiency of this system is about 28.2% and energy store media helps in maintaining 40-45 ^{0}C after the sunset.

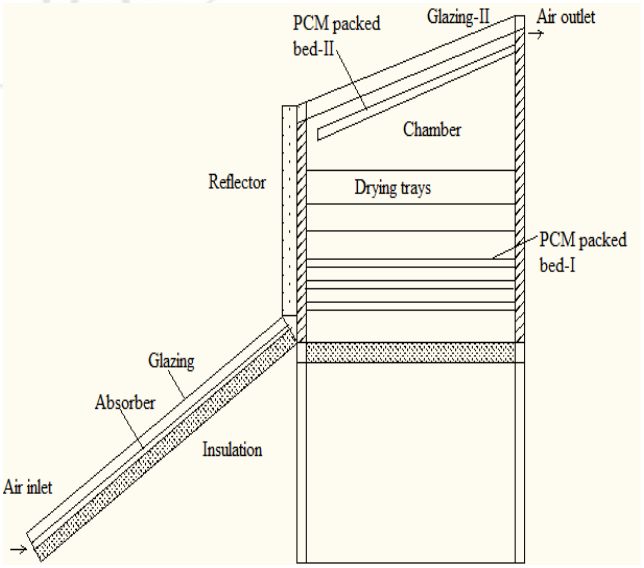

Figure 12: PCM packed bed solar dryer

Licensed Under Creative Commons Attribution CC BY

S.M. Shalaby et al. [20] studied the similar system as above with two similar solar collectors with and without PCM for different airflow rate. By the use of gives near about 2.5-7.5 ^{0}C higher than surrounding temperature during nighttime about 5 hours after sunset. He found that airflow between 0.0894 - 0.1204 Kg/s gives higher rise in temperature inside dryer. Drying time to dry basil leaves is about 12-17 hours.

Gulsah Cakmak et al. [21] designed a novel dryer and its performance evaluated for drying seeded grapes. System compromises of solar collector with expanded surfaces and solar collector with phase change material. A swirl element also used in drying chamber to create turbulence to get maximum energy transfer. Collector with expanded surface is used during daytime and PCM based collector is used after sunset; this combined system reduces overall drying time. Researcher also studied system for natural circulation and swirl condition for different air velocities. He found that drying time has inverse variation with velocity of air. Higher the air velocity lesser is the drying time.

6. Indirect Hybrid Solar Dryers

T. A. Yassen et al. [22] experimentally investigated hybrid dryer with exhaust flue gases from biomass backup as thermal source. A model developed for this hybrid solar thermal system for drying of red chilies. Researcher compared the performance of simple solar dryer with this recovery system. Experimentation done for hybrid mode during daytime and nighttime and for thermal mode during night time only. Heat recovery considerably increases dryer efficiency from 9.9% to 12.9% in thermal mode. The overall efficiency by addition of heat recovery found to be 25.84% in hybrid mode and 29.7% during thermal mode.

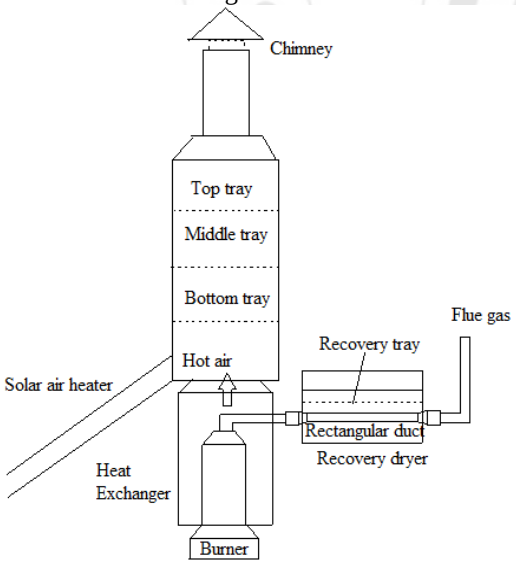

Figure 13: Biomass hybrid dryer

E. C. Lopez Vidana et al. [23] constructed a hybrid solar gas dryer based on LPG. It found that thermal efficiency of the dryer is function of mass flow rate, ambient and collector inside temperature difference and collector inclination angle. Also a simulation model for varying mass flow rate inside collector had studied to find optimum mass flow rate to obtain maximum drying efficiency, which found to be 86% for gas heating system, 71% for hybrid heating system and 24% for solar heating system. Drying rate found to be 0.03 Kg of water per kg of dried product. It also found that hybrid system requires 20% less fuel than LPG system.

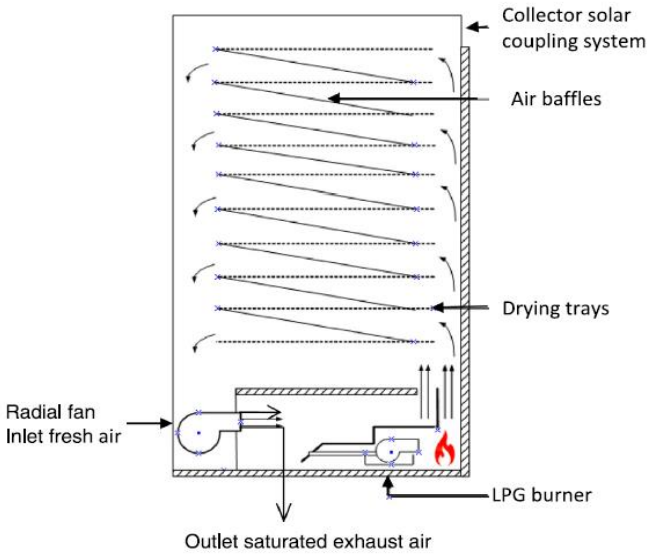

Figure 14: Solar hybrid dryer with LPG burner

S. Boughali et al. [24] developed a prototype of hybrid indirect solar dryer. Experimentation done to study effect of high mass flow rate ranging from 0.04- 0.08 Kg/m^3 performance of collector and complete drying system. Experimentation done for drying tomato slices at various temperatures and air velocities to study their effect on moisture removal rate and to find optimum values of these parameters. It concluded that generally lower mass flow rate of air is more suitable for drying application than higher mass flow rate. From economic evaluation, it found that payback for 15 years dryer line is 1.27 years, which is very less.

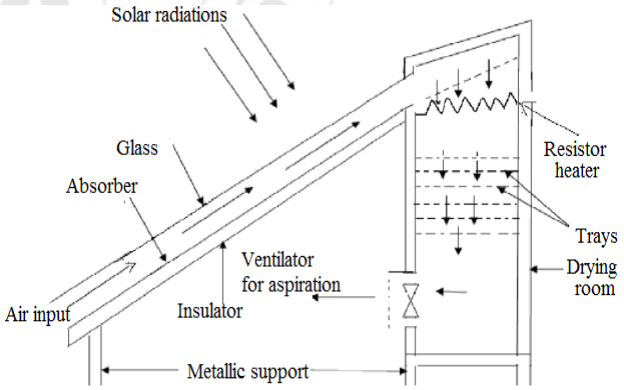

Figure 15: Indirect active hybrid solar–electrical dryer

7. Conclusion

Until different types of solar dryers are designed and their performances are evaluated to dry food products in less energy requirement with possible minimum drying time. Emphasis also given on maintaining product quality in regards to taste, color, odor and nutrients to increase product lifetime. There could be chances of color change, taste change, degradation of nutrients in direct solar dryer due to direct exposure of product to solar radiations, but these drawbacks can eliminated in indirect solar dryer. In addition, forced circulation solar dryer is more effective over natural

Licensed Under Creative Commons Attribution CC BY

circulation dryer but it increases the operating cost of system. Another way to improve the efficiency of solar drying system by use of thermal storage. In this review, it found that solar dryer with thermal storage media gives higher efficiency with minimum drying time. It is found that latent heat storage media is more efficient over sensible heat storage media as it is having higher energy storage density. In addition, use of desiccant accelerates the drying process thereby reduces drying time. Hybrid solar dryer also gives higher efficiency than the system based on solar energy only. Hybrid solar dryer could use waste heat from various process industries and can make solar dryer continuously working for commercial applications.

References

[1] M. Kumar, S. K. Sansaniwal, and P. Khatak, "Progress in solar dryers for drying various commodities," *Renew. Sustain. Energy Rev.*, vol. 55, pp. 346–360, 2015.
[2] S. Youcef-Ali, H. Messaoudi, J. Y. Desmons, A. Abene, and M. Le Ray, "Determination of the average coe• cient of internal moisture transfer during the drying of a thin bed of potato slices."
[3] A. StegouSagia and D. V Fragkou, "influence of drying conditions and mathematical models on the thin layer drying of mushrooms."
[4] V. Shrivastava and A. Kumar, "Experimental investigation on the comparison of fenugreek drying in an indirect solar dryer and under open sun," *Heat Mass Transf. und Stoffuebertragung*, vol. 52, no. 9, pp. 1963–1972, 2016.
[5] A. Fudholi, K. Sopian, M. Ruslan, M. Alghoul, and M. Sulaiman, "Review of solar dryers for agricultural and marine products."
[6] A. A. El-Sebaii and S. M. Shalaby, "Solar drying of agricultural products: A review," *Renew. Sustain. Energy Rev.*, vol. 16, pp. 37–43, 2011.
[7] L. Ia BlancoCano, A. SoriaVerdugo, L. M. GarciaGutierrez, and U. RuizRivas, "Evaluation of the Maximum Evaporation Rate in SmallScale Indirect Solar Dryers."
[8] A. Ngu Ming Chai, M. Ibrahim, C. Bin Chuan, and B. F. Yousif, "on the development of solar drying system."
[9] V. N. Hegde, V. S. Hosur, S. K. Rathod, P. A. Harsoor, and K. B. Narayana, "Design, fabrication and performance evaluation of solar dryer for banana," 2011.
[10] C. B. Pardhi and J. L. Bhagoria, "Development and performance evaluation of mixed-mode solar dryer with forced convection."
[11] B. M. A. Amer, M. A. Hossain, and K. Gottschalk, "Design and performance evaluation of a new hybrid solar dryer for banana."
[12] D. Jain and R. K. Jain, "Performance evaluation of an inclined multi-pass solar air heater with in-built thermal storage on deep-bed drying application."
[13] W. Chramsa-Ard, S. Jindaruksa, C. Sirisumpunwong, and S. Sonsaree, "Performance evaluation of the desiccant bed solar dryer," *Energy Procedia*, vol. 34, no. 34, pp. 189–197, 2013.
[14] V. Shanmugam and E. Natarajan, "Experimental study of regenerative desiccant integrated solar dryer with and without reflective mirror," 2006.
[15] S. F. Dina, H. Ambarita, F. H. Napitupulu, and H. Kawai, "Study on effectiveness of continuous solar dryer integrated with desiccant thermal storage for drying cocoa beans," *Case Stud. Therm. Eng.*, vol. 5, p. 3240, 2015.
[16] A. Kabeel and M. Abdelgaied, "Performance of novel solar dryer," *Process Saf. Environ. Prot.*, vol. 1, no. 6, pp. 183–189, 2016.
[17] A. K. Srivastava, S. K. Shukla, and S. Mishra, "ScienceDirect Evaluation of Solar Dryer/Air Heater Performance and the Accuracy of the Result," *Energy Procedia*, vol. 57, pp. 2360–2369, 2014.
[18] V. Shringi, S. Kothari, and @bullet N L Panwar, "Experimental investigation of drying of garlic clove in solar dryer using phase change material as energy storage."
[19] D. Jain and P. Tewari, "Performance of indirect through pass natural convective solar crop dryer with phase change thermal energy storage," *Renew. Energy*, vol. 80, pp. 244–250, 2015.
[20] S. M. Shalaby and M. A. Bek, "Experimental investigation of a novel indirect solar dryer implementing PCM as energy storage medium," *Energy Convers. Manag.*, vol. 83, pp. 1–8, 2014.
[21] lÅŸah Ã and C. Yıldız, "The drying kinetics of seeded grape in solar dryer with PCM-based solar integrated collector," *Food Bioprod. Process.*, vol. 89, pp. 103–108, 2010.
[22] T. A. Yassen and H. H. Al-Kayiem, "Experimental investigation and evaluation of hybrid solar/thermal dryer combined with supplementary recovery dryer," 2016.
[23] E. C. López-Vidaña, L. L. Méndez-Lagunas, and J. Rodríguez-Ramírez, "Efficiency of a hybrid solar-gas dryer," *Sol. Energy*, vol. 93, pp. 23–31, 2013.
[24] S. Boughali, H. Benmoussa, B. Bouchekima, D. Mennouche, H. Bouguettaia, and D. Bechki, "Crop drying by indirect active hybrid solar - Electrical dryer in the eastern Algerian Septentrional Sahara," *Sol. Energy*, vol. 83, no. 12, pp. 2223–2232, 2009.

Licensed Under Creative Commons Attribution CC BY