International Journal of Science and Research (IJSR)
ISSN (Online): 2319-7064
Index Copernicus Value (2013): 6.14 | Impact Factor (2015): 6.391

Optimization of Kalina Cycle

M. N. Karimi[1], Moghees Ahmad[2]

[1,2] Department of Mechanical Engineering, Faculty of Engineering and Technology, Jamia Millia Islamia, New Delhi-110025

Abstract: ***Kalina cycle proposed to extract low temperature heat and proposed binary mixture as the working fluid. Using non-azeotropic binary mixture as the working fluid opens up the horizon of the variable composition working fluid. The composition can be varied to match to get best performance of the cycle as the output is different for different composition and temperature. With the aim of optimizing the cycle this study is carried out and efficiency of the cycle is calculated for temperature range 100-200°C and composition range of 0.5-0.9 of Ammonia in the binary mixture. The maximum obtained is 18.3698% at a temperature of 190°C for 80% of Ammonia and 20% Water as the working fluid.***

Keywords: Kalina cycle

1. Introduction

Since the advent of this century, there has been focus on the sustainable use of the energy owing to escalated energy demand across the globe. Depletion of the energy resources i.e. fossil fuels and steep rise of energy demand has aggravated the energy shortage we are facing and more over the environment concerns such as pollution, global warming among other. Therefore, it is imperative to engineering community to identify and utilizes alternate energy sources to cater to this energy demand surge.

Increased focus on the environment friendly energy sources, have led to tapping and utilization of waste heat from various sources and other low grade heat sources to justify both the environment issue as well as rising energy demand. Apart from waste heat from a variety of sources such as cement industries, sugar cane industries, power plant etc. other low grade heat sources we can utilize are geothermal energy, solar energy, ocean thermal energy conversion among others. But exploiting these energy sources are not that familiar as we are with conventional sources, hence special focus is now paid to utilize these energies which is attributed to its low source temperature (<200°C). This low source temperature often results in very inefficient power extraction and often economically infeasible.

Now to utilize this low temperature heat, the cycle preferred is Rankine cycle as it has highest efficiency among the conventional cycles. But since the work extraction is from low temperature heat source, which results in very low efficiency and it doesn't serve to installing and running a Rankine power plant.

Researchers proposed cycles for this low temperature Kalina cycle was proposed by Dr. Alexander Kalina is particularly suitable for this low temperature heat extraction efficiently. In deviation from conventional power cycle, Dr. Kalina proposed binary Ammonia-Water mixture as the working fluid of the Kalina Cycle. Binary mixture has inherent advantage of having gliding temperature phase change which gives it unique advantage for low temperature applications and is an important factor for enhancing the efficiency of energy production from low grade low temperature heat source. This advantage is unique to binary mixture when used as working fluid and hence cannot be obtained in conventional power cycle. Therefore, Kalina cycle gained popularity for low temperature heat application and is thoroughly studied for various application.

2. Literature Review

The Kalina cycle is a new concept in heat recovery and power generation which uses non-azeotropic or zeotropic Ammonia-Water mixture as its working fluid. Being a zeotropic mixture, the evaporation and condensation is not constant temperature pressure process but at varying temperature. Kalina cycle has been studied for varying application for low temperature heat source.

For Solar energy utilization, Thomas Knudsen et. al. carried out energy and exergy analysis of Kalina cycle when generating power using heat the only receiver and only stored heat and they concluded that in the first case Kalina is less efficient than Rankine cycle whereas for the second case the Kalina cycle efficiency is 20% more than the conventional Rankine cycle. Parametric analysis of Kalina cycle is done by Jiangfeng Wang et. al. by developing a mathematical model to analyse solar driven Kalina cycle and to optimize the efiiciency as well. The optimized modified efficiency of the cycle is 8.54%.

For extracting Geothermal energy, Kalina Cycle has been widely studied. OguzArslan carried out exergoeconomic evaluation for geothermal energy. Geothermal Energy from Simav Fields in Turkey is studied for KCS-34 and concluded that 41.2MW energy can be extracted at an efficiency of 14.9%. Carlos Eymel Campos Rodriguez et.al. compared ORC and Kalina Cycle exergetically and economically for an advanced geothermal system and he proved that Kalina cycle produces 18% more power than ORC. Wencheng Fu et.al. demonstrated that LT Recuperator is not necessary in Kalina Cycle while utilizing heat from geothermal source and showed that 2 million dollars per year can be saved at the oil field by Kalina cycle power production. In other paper, Wencheng Fu et.al. compared Kalina cycle and existing ORC and concluded that Kalina cycle system results in more annual savings than the ORC. With the aim to find out better system for geothermal heat extraction, Suili Li et.al. compared Kalina cycle and CO_2 transcritical power cycle thoroughly and optimized the

Licensed Under Creative Commons Attribution CC BY

results using Genetic Algorithm and concluded that adoption of Kalina cycles more reasonable that CTPC.

Apart from low temperature application, Kalina is also studied for high temperature as well. Anish Modi et.al. solved and optimized Kalina cycle's four different models depending upon the position of the Recuperator and concluded that different models have different optimal performance regions. Omendra Kumar Singh et.al. studied it as a bottoming cycle at a coal fired steam power plant and optimized the cycle for best Ammonia-Water fraction. Kalina cycle efficiency reached a maximum value of 12.95% and increased overall efficiency of 0.277% and energy efficiency by 0.255%.

For bottoming cycle, a comparative analysis of a bottoming transcritical ORC and a Kalina cycle when recovering heat from an IC Engine by Chen Yue et.al. for IC engine heat extraction, transcritical ORC is better than the Kalina cycle at temperature is higher than 491K. V Zare studied Kalina cycle as bottoming cycle for a Gas Turbine-Modular Helium Reactor(GT-MHR). The results indicate that when the performances of two cycles are optimized economically, the efficiency and total product unit cost of the combined cycle is 8.2%higer and 8.8% lower than the corresponding values for the GT-MHR.

In this paper, using Kalina cycle as bottoming cycle to obtain maximum efficiency within the given temperature range, different composition has been selected and their efficiency are calculated.

3. System Description and Assumptions

Kalina cycle is analyzed as bottoming cycle for the energy recovery. The model chosen for the analysis is KCS-11 (Kalina cycle system -11). Kalina cycle system have no single model or set of system just like Rankine Cycle. There can be many Kalina cycle system depending upon different arrangements of various components. These arrangements can be different for different applications and specific requirements. KCS-11 also has particular arrangements of the components. The typical layout is shown below

As power is to be extracted from some other fluids and no direct firing takes place, therefore boiler is replaced with the HRVG which is a heat exchanger. Because of low temperature output at the HRVG

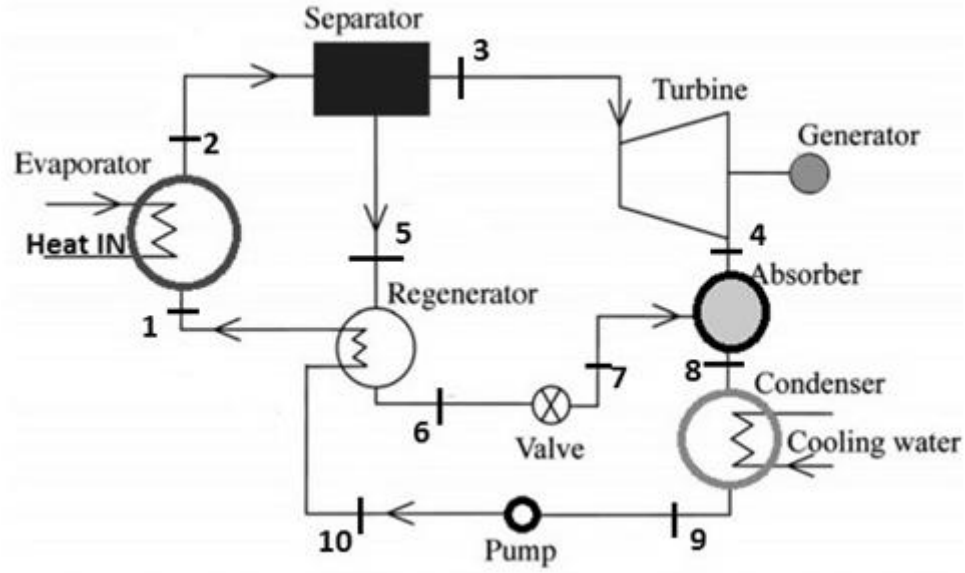

Figure 1: Kalina Cycle System 11 (KCS-11)

exit. The working fluid is not completely converted to vapour phase or superheated phase and remain in the two phase region. To separate liquid and gaseous phase of working fluid, a separator is installed after HRVG. The vapour phase mixture is enrouted to Turbine and expanded into it to lower pressure and temperature and produces work. The liquid phase from separator is passed through regenerator which gives off its heat to cooler fluid from the pump and cooler fluid after regeneration is sent to the HRVG. Regenerator is also a heat exchanger with effectiveness is 0.8. After the regenerator the high pressure liquid phase mixture is throttled to reduce its temperature. Liquid phase mixture from regenerator and vapour from the turbine are mixed in the absorber. Absorber is assumed to be an adiabatic device. The mixture is now cooled in the condenser by cooling Water to a temperature of 27°C and at the outlet of the condenser the mixture is saturated liquid. The effectiveness of the condenser is assumed to be 80%. The mixture from

Licensed Under Creative Commons Attribution CC BY

Table 2: Energy Equations

HRVG	$\dot{Q} = \dot{m}_1 \times (h_2 - h_1)$ & $\epsilon_{HRVG} = \frac{(T_2 - T_1)}{(T_{G1} - T_1)}$
Separator	$\dot{m}_1 \times h_2 = \dot{m}_3 \times h_3 + \dot{m}_5 \times h_5$
Turbine	$W_t = \dot{m}_3 \times (h_3 - h_4)$
Regenerator	$\dot{m}_1 \times (h_1 - h_9) = \dot{m}_5 \times (h_5 - h_6)$ & $\epsilon_{Regenerator} = \frac{(T_5 - T_6)}{(T_5 - T_{10})}$
Throttle valve	$\dot{m}_6 \times h_6 = \dot{m}_{10} \times h_{10}$
Pump	$W_p = v_9 \times (p_9 - p_8)$
Efficiency	$\eta = \frac{W_t - W_p}{\dot{Q}}$
Condenser	$\epsilon_{condenser} = \frac{(T_8 - T_9)}{(T_8 - T_{W1})}$ & $\dot{Q}_{cond} = \dot{m}_1 \times (h_8 - h_9)$

condenser is pumped to higher temperature by the pump. The isentropic efficiency of the pump is assumedto be 100%.The layout of KCS-11 is shown below in Figure 1 and the energy balance equations for KCS-11 are tabulated below in Table 1.

4. Results and Discussion

The Kalina cycle can be run for different composition ratio of the Ammonia-Water and the efficiencies can be calculated for each of these composition ratio of the binary mixture. The aim of varying the composition ratio of the working fluid is the quest to find the optimum composition ratio which gives maximum efficiency under the given parameters. The composition of the Ammonia is varied from .5 to .9 (50% to 90%) with steps of .05 (5%)and the efficiencies for each of these compositions are calculated in the temperature range of 100-200°C and the ceiling value for the pressure is kept as 5 MPa. the efficiency for different combinations of temperature and composition ratio is calculated and tabulated in Table 2 below.

The results obtained are plotted on the graph shown in Figure 2.

These curves in the figure below shows the trend of variation of the efficiency with the composition ratio. For low Ammonia concentration mixture, the working temperature range is on the high temperature side i.e. near the 200°C and as the concentration of Ammonia is increased in working fluid, the efficiency curves shift to the left on the graph means towards the lower temperature range with highest Ammonia concentration is on the leftmost of the curve. The highest efficiency obtained is 18.3698% for Ammonia fraction of .8 (80%) of the total mixture and rest is water at a temperature of 190°C. The lowest temperature at which positive power is produced is 110°C. therefore for very low temperature high concentration Ammonia mixture should be used.

5. Conclusions

It can be concluded from the study that the working fluid with Ammonia-water fraction of .8 & .2 is giving maximum efficiency of the 18.3698% and hence is the optimum concentration for the Kalina cycle model 11 (KCS-11). The higher Ammonia percentage efficiency curves show a trend of shifting to left side of the graph means low temperature side. Therefore, if the cycle temperature is very low then high Ammonia concentration mixture are used and for relatively high temperature the working fluid concentration can be chosen to give high efficiency.

Table 2: Efficiency for different compositions of Ammonia-water

		TEMPERATURE (°C)									
		110	**120**	**130**	**140**	**150**	**160**	**170**	**180**	**190**	**200**
AMMONIA FRACTION	**0.5**					2.16	7.16	10.29	12.746	14.76	16.436
	0.55				0.63	4.7	8	10.48	12.7837	14.44	16.06
	0.6				2.24	5.3264	8.05	10.47	12.6	14.43	15.9889
	0.65				2.93	5.71	8.325	10.6567	12.7	14.5678	16.153
	0.7			1.5632	4.5653	6.9792	9.0263	11.0448	12.8666	14.9847	
	0.75			2.1234	4.5987	7.2299	10	12.41	14.529	16.359	
	0.8			2.9432	6.0234	8.8654	11.1921	13.5498	15.9876	18.3698	
	0.85		1.8197	5.1241	8	10.5554	12.9854	14.9512			
	0.9	1.4967	3.8123	6.3541	8.8123	11.2623	13.3321				

Licensed Under Creative Commons Attribution CC BY

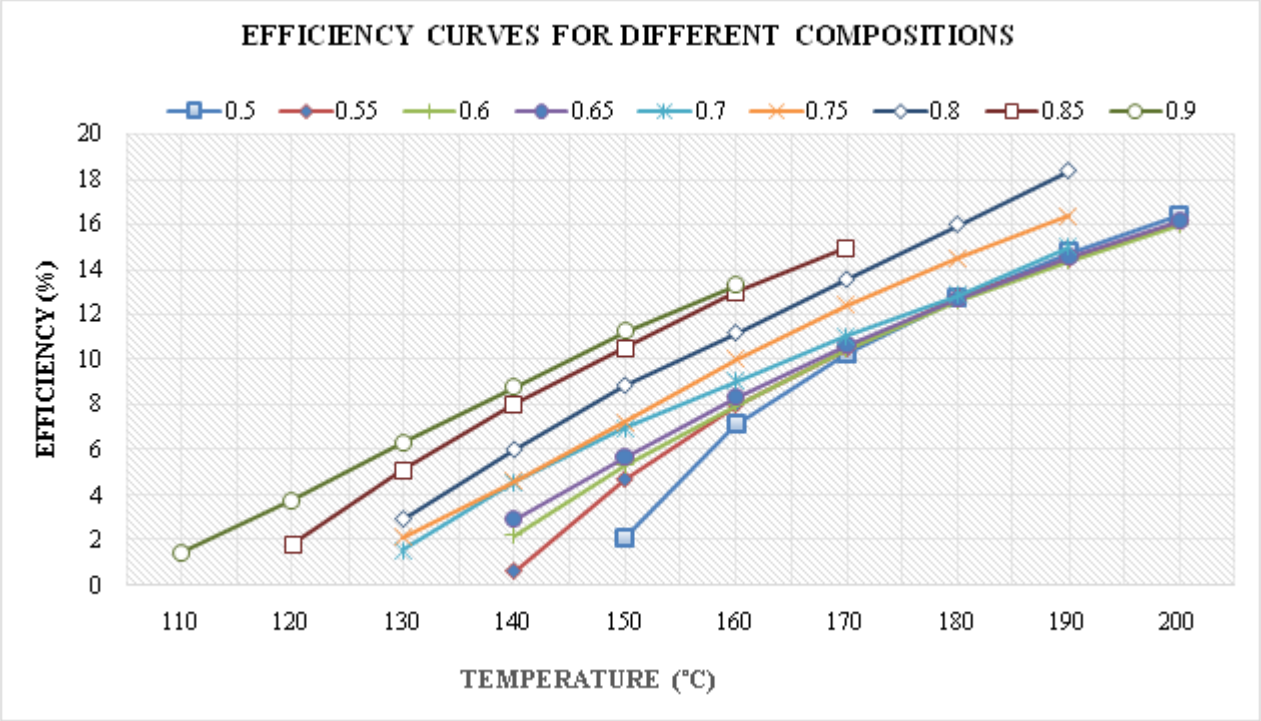

Figure 2: Efficiency curves for different Compositions

Nomenclatures

HRVG Heat Recovery Vapour Generator
KCS Kalina Cycle System
$\dot{Q}_i$ Heat input to HRVG
$\dot{m}$ Mass flow rate of working fluid, kg/s
h Enthalpy, KJ/kg
W_p Workdone by pump, KW
v_9 Specific volume of the working fluid at the exit of the pump, m^3/kg
P Pressure
T Temperature
W_p Workdone by turbine, KW
η Efficiency, %

References

[1] Thomas Knudsen, Lasse Rongaard Clausen, Fredrik Haglind, Anish Modi, Energy and exergy analysis of the Kalina cycle for use in concentrated solar power plants with direct steam generation, Energy Procedia 57 (2014) 361–370.
[2] Jiangfeng Wang, Zhequan Yan, Enmin Zhou, Yiping Dai, Parametric analysis and optimization of a Kalina cycle driven by solar energy, Applied Thermal Engineering 50 (2013) 408-415.
[3] OguzArslan, Exergoeconomic evaluation of electricity generation by the medium temperature geothermal resources, using a Kalina cycle: Simav case study, International Journal of Thermal Sciences 49 (2010) 1866-1873.
[4] Carlos Eymel Campos Rodríguez, José Carlos Escobar Palacio, Osvaldo J. Venturini, Electo E. Silva Lora, Vladimir MelianCobas, Daniel Marques dos Santos, Fabio R. LofranoDotto, VerneiGialluca, Exergetic and economic comparison of ORC and Kalina cycle for low temperature enhanced geothermal system in Brazil, Applied Thermal Engineering 52 (2013) 109-119.
[5] Wencheng Fu, Jialing Zhu, Wei Zhang, Zhiyong Lu, Performance evaluation of Kalina cycle subsystem on geothermal power generation in the oilfield, Applied Thermal Engineering 54 (2013) 497-506.
[6] Wencheng Fu, Jialing Zhu, Tailu Li, Wei Zhang, Jun Li, Comparison of a Kalina cycle based cascade utilization system with an existing organic Rankine cycle based geothermal power system in an oilfield, Applied Thermal Engineering 58 (2013) 224-233.
[7] Saili Li, Yiping Dai, Thermo-economic comparison of Kalina and CO_2 transcritical power cycle for low temperature geothermal sources in China , Applied Thermal Engineering 70 (2014) 139-152.
[8] Anish Modi, Fredrik Haglind, Thermodynamic optimisation and analysis of four Kalina cycle layouts for high temperature applications, Applied Thermal Engineering 76 (2015) 196-205.
[9] Omendra Kumar Singh, S.C. Kaushik, Energy and exergy analysis and optimization of Kalina cycle coupled with a coal fired steam power plant, Applied Thermal Engineering 51 (2013) 787-800.
[10] Chen Yue, Dong Han, Wenhao Pu, Weifeng He, Comparative analysis of a bottoming transcritical ORC and a Kalina cycle for engine exhaust heat recovery, Energy Conversion and Management 89 (2015) 764–774.
[11] V. Zare, S.M.S. Mahmoudi, M. Yari, On the exergoeconomic assessment of employing Kalina cycle for GT-MHR waste heat utilization, Energy Conversion and Management 90 (2015) 364–374.

Licensed Under Creative Commons Attribution CC BY