International Journal of Science and Research (IJSR)
ISSN (Online): 2319-7064
Index Copernicus Value (2013): 6.14 | Impact Factor (2015): 6.391

# Implementation of Integrated Array Controller and Battery Charger for Small Satellites

**C. S. Madhusudhana[1], Dr. J. K. Kishore[2], Mourya Koka[3]**

[1]Engineer, ISRO Satellite Centre, Bangalore-17, India

[2]Senior Scientist, ISRO Satellite Centre, Bangalore-17, India

[3]M.Tech Scholar, PES Institute of Technology

**Abstract:** ***The power processing is an important aspect of a spacecraft power systems. This involves circuitries for carrying out the functionalities of array control, battery charging and bus regulation. Conventionally these functions are carried out by standalone sub functional units. These functional units are available in different panache. A power system configuration is thus a combination of a set of matching functional entities together carrying out the power control and management. Though distinct power system configurations are tailor made for specific mission scenario, they fell short of optimality required for small satellite missions. Hence a scheme comprehensively addressing such requirements has been a necessity. In this regard, an integrated array controller and battery charger leveraging the limitations of the present schemes is simulated using Matlab® and an hardware amounting to this design has been developed.***

**Keywords:** Array control; power management; bus regulation; battery charge management; current loop; power bus

## 1. Introduction

Power systems configuration depends on the mission conditions and the class of the satellite. The mission scenario describes the relevant constraints and input conditions for power system design. The other important factor, the „class" of satellites imposes the restrictions on the definition of the power system configuration. Traditional satellite missions are extremely expensive to design, build, launch and operate. Consequently, attention of the aerospace industry is diverted towards small, distributed and inexpensive satellites. This evinced interest in research labs and universities for the development of mini, micro and nano satellites for various applications. New concepts evolved as small satellite domain imposes itself as a particular field. Therefore, concepts such as, constellation, cluster, and swarm became popular because of their potential to perform coordinated measurements for remote control missions and its capacity of long-term mission. Since small satellites are capable of high performance missions with promising future, the same has been considered as platform for application - study.

Solar arrays, energy storage batteries and power electronics forms the basic blocks of a spacecraft power system. These building blocks can be interconnected in different ways to result in different spacecraft power systems [1]. A sunlit regulated Direct Energy Transfer (DET) system consists of a solar array directly powering the spacecraft bus. The power electronics generally consists of a shunt regulator system for power bus regulation during sunlit. Battery provides power back–up whenever deficiency occurs due to an insufficient power from the solar array, or during the eclipse. Bus regulation scheme is a mechanism to maintain the power bus voltage within the specified limits under both sunlit and outage conditions. The power electronics is designed to manage and control the constituent elements. The combination of these basic building blocks of different variants results in variety of power systems.

The main function of the electrical power subsystem is to generate and deliver electricity to all points of utilization in a spacecraft. The generated electricity must satisfy the power and energy requirements of the spacecraft subsystems taking into account all planned usages. The control and management tasks of an electrical power system to achieve the mission goal are grouped under Power Control and Management (PCM). The functions of a typical PCM are illustrated in fig. 1.

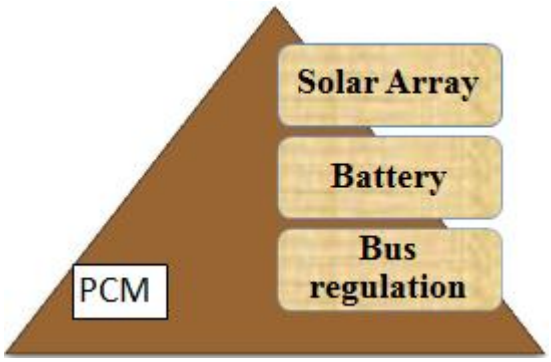


**Figure 1:** Functions of a Power Control and Management

Power control and management encompasses the functionality of (i) *Control of photovoltaic solar arrays* for power generation, (ii) *Battery charging and management* to store energy in batteries for use during eclipse and peak load requirements, and (iii) *Bus regulation* to maintain the power bus voltage within the specified limits.

## 2. Power Configurations

There are different types of Power Control and Management (PCM) schemes used in practice. Most of the PCM schemes Direct Energy Transfer (DET) type. A typical DET power subsystem routes power directly from the solar array to loads and dissipates unused power. Parallely, battery charging is carried out to provide the energy support during


Licensed Under Creative Commons Attribution CC BY

eclipse. Though different types of power configurations are described, a broad classification of *array control – battery charging* duo is used for comparison. A typical power system configuration for a sunlit regulated / battery regulated bus is depicted in the fig.2.

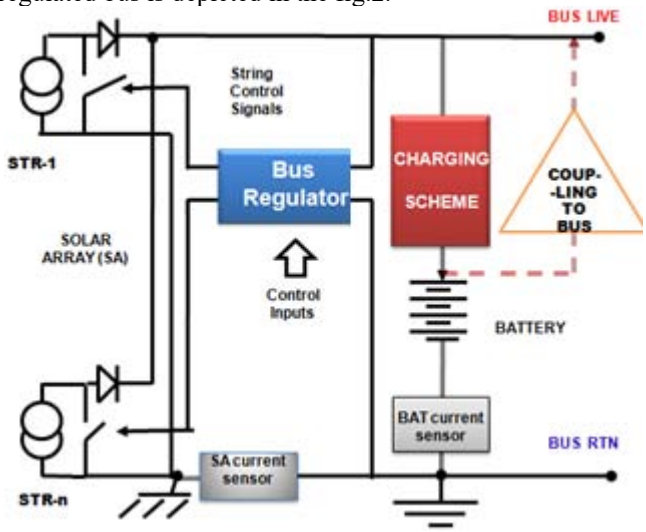


**Figure 2:** General power system configuration

### 1) Array regulator - Constant current charging

During sunlit, bus voltage is maintained within limits using shunt regulators. The battery is charged from solar power (charger array / string) during the orbital day, and discharged to provide power during the orbital night or when the load demand exceeds the solar array capability [2]. A typical power system for GEO is based on sunlit bus regulation where in solar strings are controlled to regulate the bus voltage, and the battery is decoupled from the bus using a discharge diode (fig.3).

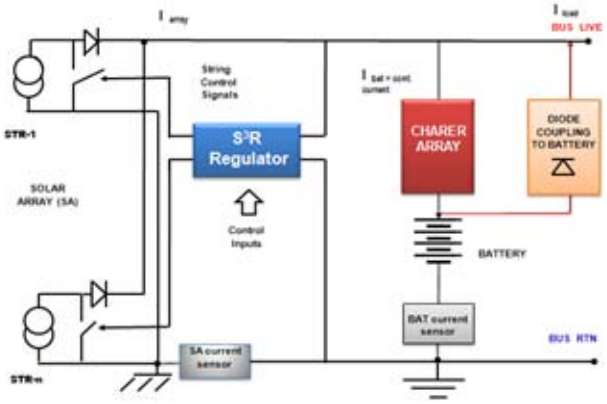


**Figure 3:** String controlled constant charge current config.

### 2) Array regulator - Taper current charging

Battery charging in LEO spacecrafts is generally carried out from power bus directly using a *Taper Charge Regulator* (TCR). TCR charges the battery with a constant current till a SET voltage is reached. Thereafter charge current reduces exponentially maintaining the same voltage across the battery. A typical battery clamped bus is shown in figure 4.

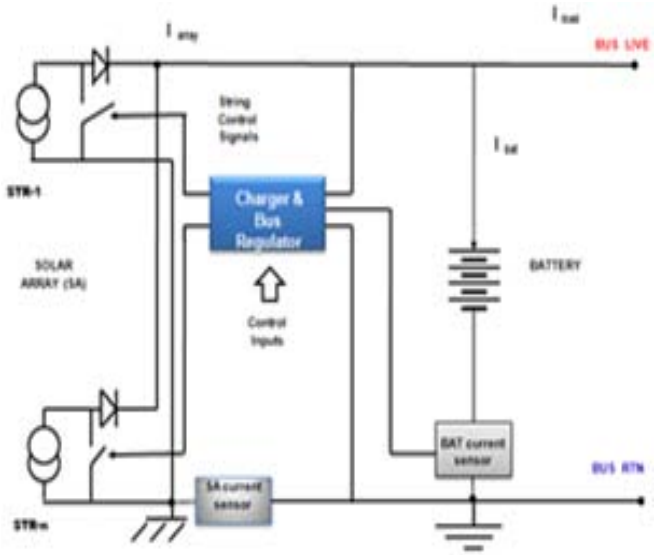


**Figure 4:** String controlled taper charge current configuration

### 3) Drawbacks of the schemes

Though the systems described have heritage and extensively used in space applications, they suffer from efficiency perspective. Battery charging in such schemes comes with a penalty of under - utilization of array power due to clamping of bus, as well the additional requirement of array regulators for individual string control thus resulting in power loss.

## 3. Integrated Array Controller -Battery Charger ( IACBC )

The block schematic of integrated array controller-battery charger is shown in the fig. 5. It is a circuit which is placed between the „OR"ed array bus and battery/load. This scheme avoids the direct appearance of array across the battery, thus avoiding battery voltage and array bus voltage clamping. Due to the integrated bus regulator approach, it is possible either to fully support the bus or to charge the battery with all available power. Hence the available processed power can be used for charging the battery after meeting the load requirements. The array voltage is varied linearly as a function of the total array power generated.

$$\text{IACBC: } \int \textit{string controller} \Rightarrow \text{array controller}$$

The overall control function is carried out by a single PWM system to control the „OR"ed array bus instead of using individual string control elements with associated drivers. This results in compact hardware. The concept is based on current controlled boost converter regulator in which the solar array power is fed to the load and battery after power processing. The control functionalities have been achieved by varying the duty cycle with battery current as the controlled variable.


Licensed Under Creative Commons Attribution CC BY

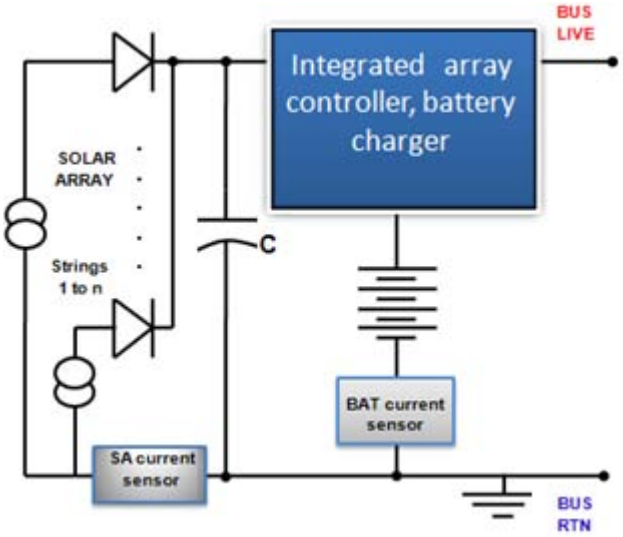


**Figure 5:** Integrated array controller and battery charger

The array voltage is steered to operate at a power as a function of load and charging requirements. To support the changes in power requirements, the array voltage is changed linearly across different power generation points. The voltage relationship of a basic boost converter is given by

$$\frac{V\ out}{V\ in} = \frac{1}{(1-D)} \qquad (1)$$

Modern batteries are characterized by high power density and improved Wh efficiency. However many battery technologies including Li-ion cannot tolerate overcharging. The integrated controller efficiently handles this requirement by charging with constant current until the set point, and thereafter turning it off to zero to protect battery from over charging. This can be done by controlling the duty cycle of the electronic regulator. To implement the same, analog based two loop control scheme in conjunction with a PWM controller is used.

Integrated controller compares the charge reference signal with battery current and generates a control signal to control the duty cycle of the electronic regulator. This loop is called Battery Charge Controller (BCR) loop. The scheme of implementation involves current controlled boost converter with additional outer voltage loop to truncate the overcharge battery current.

In the second loop, the set battery charge reference voltage is compared with the sensed output / battery voltage. When the set voltage reaching is sensed by the voltage loop, the battery charge current is reduced to zero indicating reaching of the required battery state of charge . The same is carried out by pulling down of the battery current reference point to zero by the active pull down of the battery voltage loop.

Table I illustrates features of the integrated array controller and battery charger{3} vis–a–vis the other schemes used in practice. It may observed that the integrated scheme produces lesser noise with the absence of array dv/dt switching while producing continuous input current. Secondly the avoidance of array and battery clamping results in higher efficiency of battery charging [4].

**Table 1:** Broad classification of power configurations

| *METRIC* | *Array regulator - Constant current charging {1}* | *Array regulator - Taper current charging {2}* | *Integrated array controller and battery charger {3}* |
|---|---|---|---|
| Charge efficient factor | $\frac{P_{array_bat}}{P_{mpp}}$ | $\frac{P_{array_bat}}{P_{mpp}}$ | $\frac{P_{bat.ch*}}{P_{chrg-inp^{**}_{apportioned}}}$ |
| Minimum charge current | $I_{charger\ array}$ | Down up to TCR resolution | Down up to BCR resolution |
| Maximum charge current | Limited to $I_{charger\ array}$ x n | Min((array-load), TCR Set current) | Min ((array -load), BCR set Current) |
| Charging mode | Fixed / In - multiple steps ( commandable) | Programmable constant current followed by tapering | Programmable constant Current with auto cut-off |
| Separate Array regulator | Required | Required | Not required as string switching is absent |
| Features | • Involves array dv/dt switching<br>• Input current is continuous with one string switching current | • Involves array dv/dt switching<br>• Input current is continuous with one string switching current | • Involves linear array steering<br>• Input current is continuous with small inductor ripple current |

## 4. Simulation of the Scheme

Modeling of the scheme (fig. 6) has been carried out facilitate the simulation of integrated array controller and battery charger. Design simulation of the IACBC was carried out for a 250 W load. Functionally the IACBC carries out the functionality of array controller and battery charger.

**IACBC::array controller + battery charger + load support**

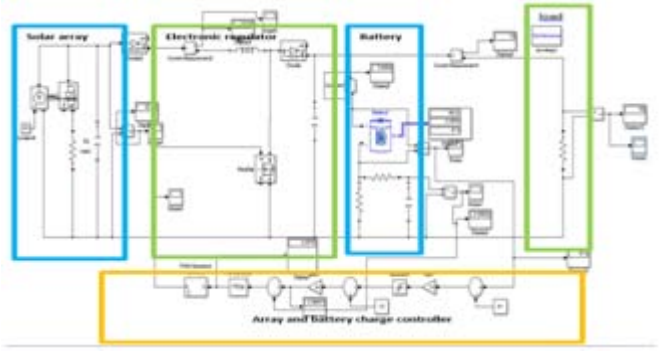

**Figure 6:** Modeling of IACBC scheme

The conditions assumed for the above simulations are
Array voltage: 28V to 33 V
Battery voltage: 35 V to 42 V
Load power: 250W
There are two states of operation of the integrated converter. It is in synonym with the power switch operation. The first state is during the closure of the switch; this is known as the energy storing phase. During the charging phase of


Licensed Under Creative Commons Attribution CC BY

operation; the switch is closed and the inductor is charged by the source through the switch. The charging current increases linearly as a function of applied input voltage and time duration. The series blocking diode restricts the reverse flow of current from output into the shunt switch, and the demand of the load is met by the discharging of the output capacitor.

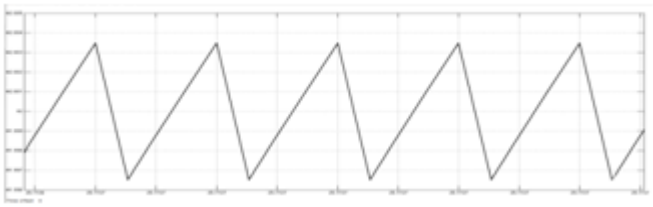

**Figure 7:** Input ripple current

The next state of operation is when the switch is open; this is known as the energy release phase. In the discharge mode of operation, the switch is open and the diode is forward biased. The inductor now discharges, and together with the source charges the capacitor and meets the load and charging demands. The load current variation is very small and in many cases is assumed constant throughout the operation.

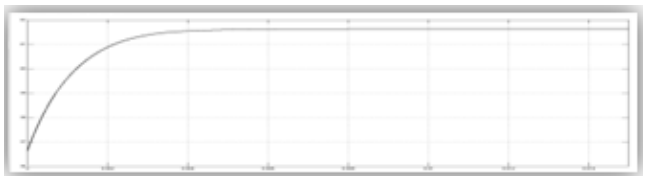

**Figure 8:** Output voltage build up

The output build up time before output diode and associated output ripple is illustrated in fig. 8 and fig. 9 respectively.

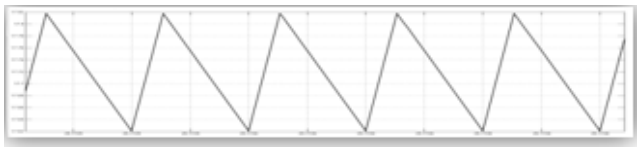

**Figure 9:** Output voltage ripple

## 5. Hardware Realization

To demonstrate the hardware realizably of the scheme, and performance assessment, a hardware has been designed and implemented. The hardware and associated set-up for test and evaluation has been illustrated in fig. 10.



**Figure 10:** Hardware test set up

The scheme results in continuous input current, which is an EMI friendly [6] due to the presence of the inductor on input side. D.C value of this input current of the system is equal to array current. On the output side, the processed power partly charges the battery, and other part leads to support the load.

Fig.11 illustrates the switching waveforms of the hardware realized for the load power of 250W under the output conditions of Varray = 28 V and V bat = 42 V.

The inductor current increases with time, during the switch „ ON" period and energy stored in the inductor is released during „OFF" period indicated by high voltage plateau region.

Thus the total array power is given by

$$P_{array} = P_{battery\text{-}charge} + P_{load} \quad (2)$$

$P_{batt.}$ represents the average battery power, $P_{load.}$ represents the average load power and $P_{array}$ Represents the average array power.




**Figure 11:** Switching waveforms

Thus the array current is a function of battery charge current and load current. As the battery current/ load current changes, array current also changes reflecting the cause.

$$I_{array} = f(I_{load,}, I_{battery}) \quad (3)$$

Duty cycle „D"is varied to the adjust the boost ratio between the array voltage and output of the converter. The resultant array voltage as a function of output variable voltage ($V_{bat}$) is given by

$$V_{array} = V_{bat}(1 - D) \quad (4)$$

**Table 2:** Performance evaluation of the integrated scheme

| Vin (V) | I in (A) | Input power (Watt) | Load+ battery current (A) | Output Power (Watt) | Efficiency |
|---|---|---|---|---|---|
| 32 | 4.03 | 129 | 2.9 | 122 | 94.57 |
| 32 | 4.97 | 159 | 3.6 | 151 | 94.97 |
| 32 | 6.63 | 212 | 4.6 | 193 | 91.04 |
| 32 | 8.41 | 269 | 5.71 | 240 | 89.22 |

The table II illustrates the performance of the hardware developed under a possibly worst case condition of highest battery voltage. For demonstration purposes a load power of 240 W was considered. It can be still seen from the table that


Licensed Under Creative Commons Attribution CC BY

the above scheme scores over the other in maintaining high overall efficiency.

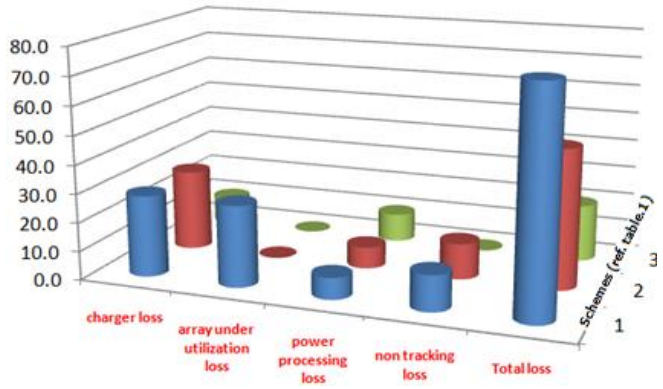


**Figure 12:** Different losses for the three schemes

Performance of the different schemes was evaluated and the associated losses are detailed in the figure 12. It can be observed that in addition to the better noise performance, the integrated power controller charger scheme {3} scores over the other for a typical case of load and charge power.

**Advantages**

1) Parts count is reduced.
2) It avoids the battery clamping with array bus which in turn reduces the generation loss.
3) Maximum power point tracking is possible.
4) String level blocking diodes are eliminated due to array bus regulation technique thus improving the overall efficiency.
5) Battery charging is possible up to the processed power ; enables quick charging.
6) Can start with low load / no load cases.

## 6. Conclusion

Different PCM schemes are used for carrying out control and management functionalities in an array fed battery backed power systems. Majorly, the constituent functions of a power control are carried by independent units. This has resulted in cost, time and effort overheads. Because of integration of major PCM functionalities, the integrated scheme results in development of compact power subsystem. It provides for improved system performance in terms of flexibility, efficient noise control. The overall power system efficiency is improved because of integrated power processing, and due to avoidance of static array operation. In the proposed technique, an electronic converter is used as an electronic regulator. Instead of regulating the bus voltage through individual shunt switches of solar array, the proposed technique will regulate the bus and battery voltage by controlling the duty cycle of an electronic switch of the regulator. Because of two loop control, we are able to regulate the array power and battery charge concurrently. This technique leads to a cost effective automatic battery overcharge protection system. Finally, software simulation and evaluation of realized hardware showed similar matching results.

## References

[1] D. O'Sullivan "Space Power Electronics Design Drivers" ESl Journal 1994 Vol. l.
[2] Mukund R. Patel, Spacecraft Power Systems, CRC press.
[3] C.S. Madhusudhana, J.K.Kishore "Optimum Power Control and Management (PCM) of Small Satellites for LEO and GEO applications" National Conference on Recent Developments In Electronics, Jan 18 -20, 2013, INDIA.
[4] C. S.Madhusudhana, J.K.kishore, "Performance metrics for evaluating spacecraft Power Control and Management (PCM)" IEEE international conference on power energy and control, February 6-8, 2013, INDIA.
[5] Dynamic Optimization of Bidirectional Topologiesfor Battery Charge/Discharge in Satellites **J.** Calvente, L. Martinez- Salamero, **P.** Garces, R. Leyva and **A.** Cape1, Department &Enginyeria Electronica, Electrica i Autornatica ALCATEL SPACE INDUSTRIES Universitat Rovira i Virgili, Tarragona, Spain. Toulouse, France.
[6] Krishna Shenai, "Spacecraft Power Systems Design to Minimize Electro Magnetic Interference (EMI) Effects",: PIERS Proceedings, August 27-30, Prague, Czech Republic, 2007.
[7] Ausias Garrigós, José A. Carrasco, José M. Blanes,Francisco García de Quirós, Esteban Sanchis-Kilders "A Power Conditioning Unit for High Power GEOSatellites based on the Sequential Switching ShuntSeries Regulator" ,IEEE MELECON 2006, May 16-19, Benalmádena (Málaga), Spain.


Licensed Under Creative Commons Attribution CC BY