International Journal of Science and Research (IJSR)
ISSN (Online): 2319-7064
Impact Factor (2012): 3.358

Comparative Study of the Sinusoidal Oscillator by using Current Conveyor

Gargi Sharma[1], Jagandeep Kaur[2], Neeraj Gupta[3]

[1]M.Tech (ECE), Amity University Gurgaon, India

[2]Lecturer, Amity University Gurgaon (Haryana), India

[3]Lecturer, Amity University Gurgaon (Haryana), India

Abstract: ***Current Conveyors have been used as a basic building block in a variety of electronic circuit in instrumentation and communication systems. Today they replace the conventional OPAMP in so many applications such as active filters, oscillators, analog signal processing and A/D, D/Convertors. Current conveyor is a high performance analog circuit design block based on current mode and voltage mode approach. It is basically a unity gain element that exhibits high linearity, wide dynamic range, high bandwidth and better high frequency performance. The current conveyor is a combination of voltage as well as current follower. Current conveyor has the advantages of a wide current and voltage bandwidths. We use a translinear configuration for first, second and third generation current conveyor. Here, Sinusoidal oscillator by using CCI CCII and CCIII perform good accuracy and frequency response at 1.5V supply voltage. The current conveyor is simulated in terms of voltage offset, current offset, current bandwidth and voltage bandwidth in 180nm CMOS technology using Mentor Graphics tools.***

Keywords: CMOS Current Conveyor, CCI, CCII, CCIII and Miscellaneous symbolic representation of CCI, CCII, CCIII.

1. Introduction

Analog design which is historically viewed as voltage mode design dominated and this is quite evident when current signals are readily transferred into voltage domain before any analog signal processing takes irrespective of the fact that BJTs and FETS both are current output devices. Moreover, MOS transistors particularly in CG & CS configuration are more suitable in current mode. The advantages of current mode approach is well illustrated with design of oscillators which employ bipolar technology and exhibit an almost constant bandwidth irrespective of closed loop gain, together with very high slew rate. In CMOS technology, with mixed analogue and digital circuitry in VLSI, new developments had led to new generation of analog sampled processing which are referred to as switched or dynamic current circuits. Some of these circuits include switched current filters, dynamic current mirrors and current copier and memory cells. The operating switching frequency has been increased by more than order by employing Transconductance amplifier and current mirroring approach. Translinear circuit approach introduced by Barrie Gilbert(Gilbert,1975)[1-3] has led to development of new analog building block ranging from current conveyors, through to sampled data current circuits such as current mirrors. Of these current conveyors is an extremely powerful building block combining voltage and current mode capability. Development of current mode analogue signal processing is reflected by development of systems based on current mode approach.

2. Principle of Sinusoidal Oscillator

The basic structure of a sinusoidal oscillator consists of an amplifier and a frequency selective network connected in positive-feedback loop. Although in an actual oscillator circuit, no input signal will be present, we include an input signal here to explain the principle of operation. With exception such as relaxation oscillator, the operation of oscillator is based on principle of positive feedback where portion of the output signal is feedback into input without phase change. Thus, it reinforces the input and sustains the continuous sinusoidal output. Beside this, the phase shift of feedback signal must be either 0° or 360°. The last requirement is the loop gain T of amplifier must be equal to one, which is also named as *Barkhausen criterion*. Thus mathematically, the loop gain T is

$$T = A_V \beta = 1$$

Where A_V is the voltage gain of the amplifier and beta is the feedback at output voltage. An oscillator enjoys the same status in the domain of electrical and electronics engineering as do wheels in the mechanical engineering. Sinusoidal Oscillators of variable frequency find wide range of applications in instrumentation & measuring systems, communication, control systems and signal processing. For the implementation of RC (resistance-capacitance) sinusoidal oscillator

3. Sinusoidal Oscillator by using CCI

Here, Sinusoidal oscillator by using first generation current conveyor (CCI) is designed by the miscellaneous symbol of CCI which is generated by the schematic of CCI as shown in fig.1 and fig.2 below:

Licensed Under Creative Commons Attribution CC BY

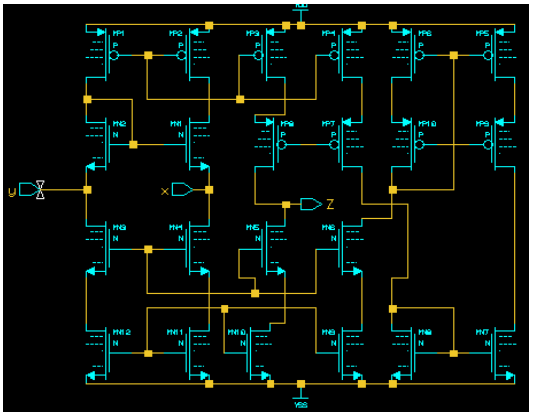

Figure 1: Schematic designing of CCI

After the designing of First-generation current conveyor (CCI) its symbol is designed by selecting the whole circuit by using the Mentor Graphics tools and coping it in the new schematic by a new name and in miscellaneous press the option of generate symbol then first generation current conveyor miscellaneous symbol will be generated as shown in fig.2

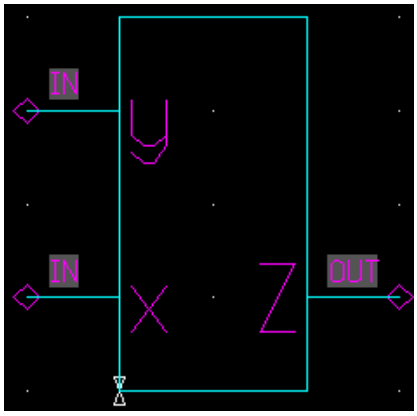

Figure 2: Miscellaneous symbolic representation of CCI

After the miscellaneous symbolic representation of CCI, that symbol is also called as the black block representation. Here, by this symbol we will design sinusoidal oscillator as shown in fig.3. First generation current conveyor is suitable design of sinusoidal oscillator with few grounded passive elements. Sinusoidal oscillator can tune its oscillation frequency of 2.5 MHz It has been shown in fig.3 that first generation current conveyor provides high linearity, wider dynamic range and better high frequency performance compared to classical operational amplifiers, Furthermore, the first generation current conveyor(CCI) finds applications covering a broad area ranging from filters, oscillators and immittance or inductance simulator designs to integrators and differentiators.[4] Basically, the first generation current conveyor consists of the connection of voltage follower (VF) .with current mirrors. Intrinsically the CCI presents a parasitic resistance at X terminal, which can be controlled by varying the bias current, to obtain a current controlled CCI.

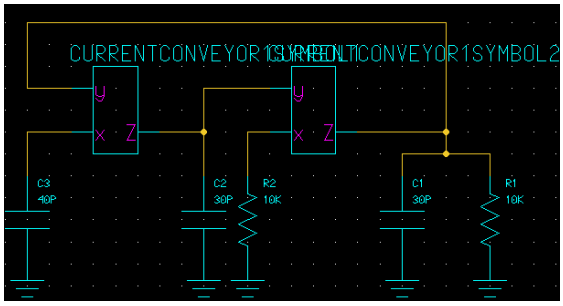

Figure 3: Sinusoidal oscillator by using CCI

The variation at the output terminal allows to an analog designer to realize sinusoidal oscillators and filtering applications, providing tenability characteristics. Simulation result of sinusoidal oscillator by using CCI is as in fig.4

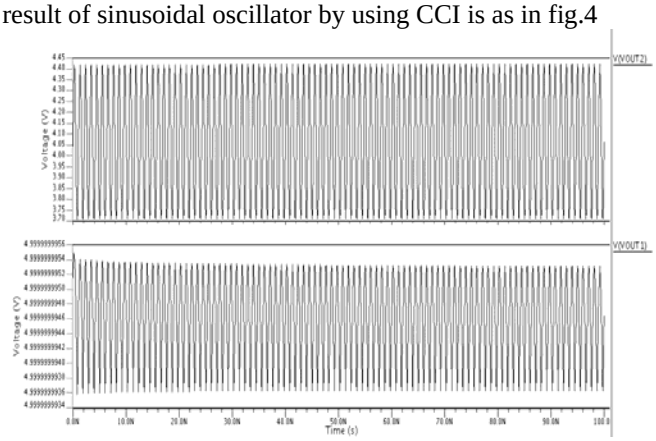

Figure 4: Waveform of Sinusoidal oscillator by using CCI

Result-CCI based Sinusoidal oscillator C1=40PF, C2=30PF and R1=R4=10KΩ and Oscillation frequency is 2.5MHz.

4. Sinusoidal Oscillator by using CCII

A second generation current conveyor (CCII) based resistance-capacitance (RC) sinusoidal oscillator operating over wide range. The oscillation condition and oscillation frequency can be adjusted independently by two control resistors. The leakage power consumed by CMOS based Second generation current conveyor (CCII) is 9.5mW.Sustained oscillation obtained at 250MHz. The circuit proposed makes use of grounded capacitors the circuit enjoys low sensitivities and suitable for integration. Sinusoidal oscillator of variable frequency find extensive applications in communication systems, instrumentation and measurement. The simplicity of the design approach turns into a disadvantage when it is desired to change the frequency of oscillation independent of the necessary and sufficient condition required to sustain the oscillations. Here, the sinusoidal oscillator by using CCII is design by the miscellaneous symbol of CCII, which is generated by the schematic of CCII as shown in fig.5 and fig.6 below:

Licensed Under Creative Commons Attribution CC BY

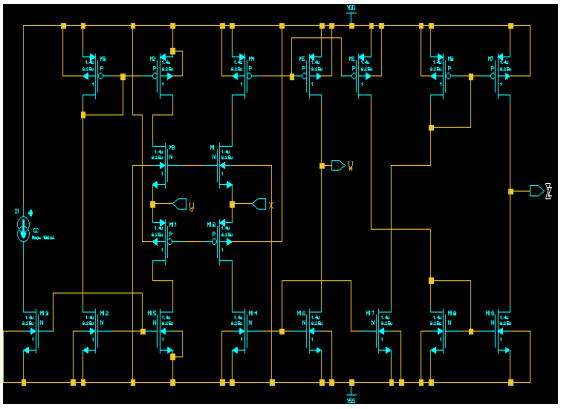

Figure 5: Schematic designing of CCII

After the designing of Second-generation current conveyor (CCII) its symbol is designed by selecting the whole circuit by using the Mentor Graphics tools and coping it in the new schematic by a new name and in miscellaneous press the option of generate symbol then first generation current conveyor miscellaneous symbol will be generated as shown in fig.6

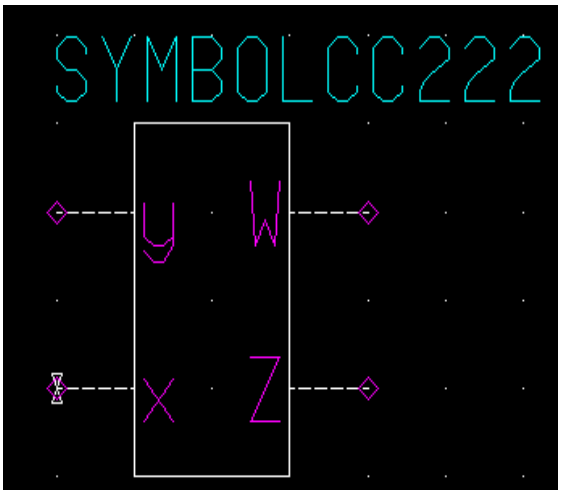

Figure 6: Miscellaneous symbolic representation of CCII

After the miscellaneous symbolic representation of CCI, that symbol is also called as the black block representation. Here, by this symbol we will design sinusoidal oscillator as shown in fig.7. The second generation current conveyor (CCII) is sometimes claimed as the standard building block of current mode operation which stems largely from the fact that the CCII offers a useful way of realizing complex circuit functions. In the recent years, their applications and advantages in the RC sinusoidal oscillators with the salient features of controlling the frequency of oscillation without affecting the condition for oscillation have received considerable attention. The proposed RC sinusoidal oscillator using second generation current conveyor (CCII) with grounded capacitor is as shown below [5]

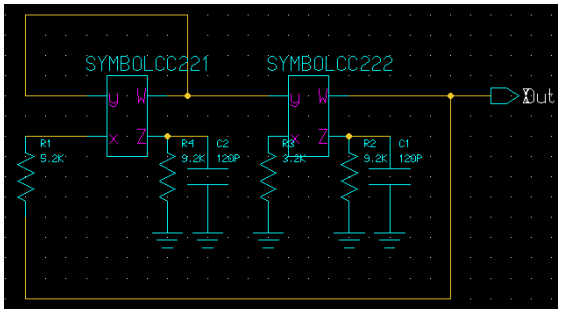

Figure 7: Sinusoidal oscillator by using CCII

The output waveforms presented and the results discussed in this are simulated outcomes of the proposed circuit carried out by use of mentor graphic 0.18um technology. Delay in the start of oscillation = 137.64 ns, Frequency achieved = 250 MHz and Amplitude achieved-664.13 mV. Simulation result of sinusoidal oscillator by using CCII is as in fig.8

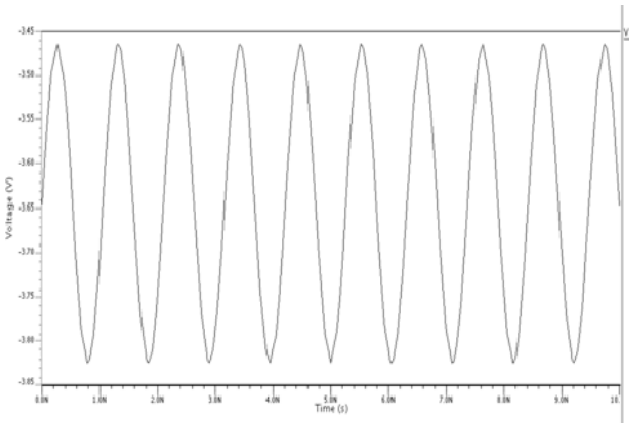

Figure 8: Waveform of Sinusoidal oscillator by using CCII

Result- A proposed CMOS second generation based sinusoidal oscillator has been described and simulate up to a maximum frequency of 250MHz.The circuit follow the input-output characteristics of second generation current conveyor(CCII).R1=R2=R=9.2KΩ,C1=C2=C=120PF and Rf=3.2 KΩ under the condition Rc=5.2 KΩ.

5. Sinusoidal Oscillator by using CCIII

Here, Sinusoidal oscillator by using third generation current conveyor (CCIII) is designed by the miscellaneous symbol of CCIII which is generated by the schematic of CCIII as shown in fig.9 and fig.10 below:

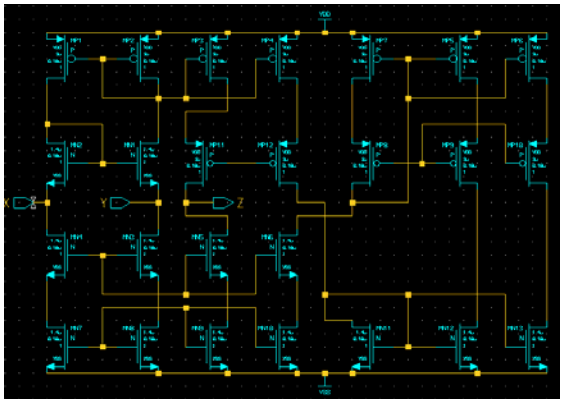

Figure 9: Schematic designing of CCIII

Licensed Under Creative Commons Attribution CC BY

After the designing of Third-generation current conveyor (CCIII) its symbol is designed by selecting the whole circuit by using the Mentor Graphics tools and coping it in the new schematic by a new name and in miscellaneous press the option of generate symbol then first generation current conveyor miscellaneous symbol will be generated as shown in fig.10

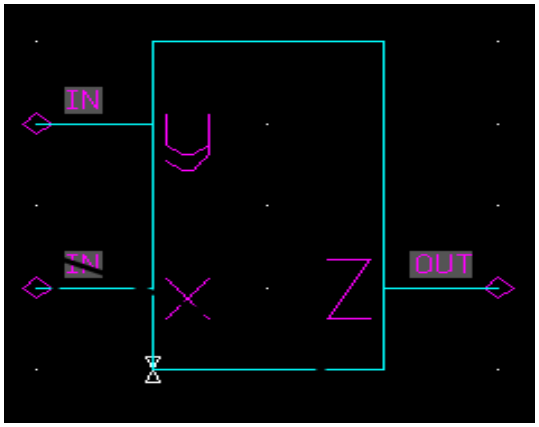

Figure 10: Miscellaneous symbolic representation of CCIII

After the miscellaneous symbolic representation of CCIII, that symbol is also called as the black block representation. Here, by this symbol we will design sinusoidal oscillator as shown in fig.11.The sinusoidal oscillator using third generation of current conveyor has frequency of oscillation 35MHz. In this case R3 controls the oscillation condition (R3=R2) without affecting the oscillation frequency. For C1=C2=C. It possible to set this frequency by controlling the value of R1.Single element controlled, specifically a resistor or in some cases a grounded capacitor, oscillator finds application in numerous of measurement and instrumentation. Such oscillators are also used to generate low frequency sinusoidal signal [6]. The proposed RC sinusoidal oscillator using third generation current conveyor (CCIII) with grounded capacitor is as shown below:

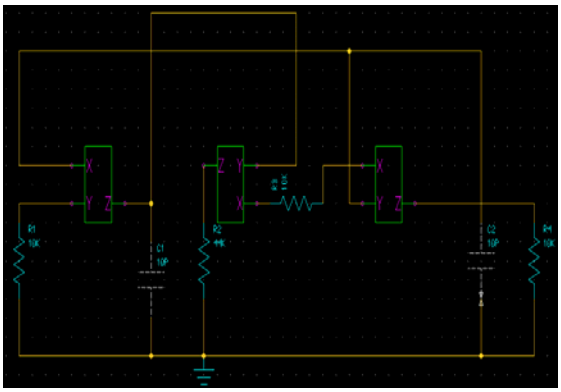

Figure 11: Sinusoidal oscillator by using CCIII

The simulation result of sinusoidal oscillator as shown in fig. 12 below:

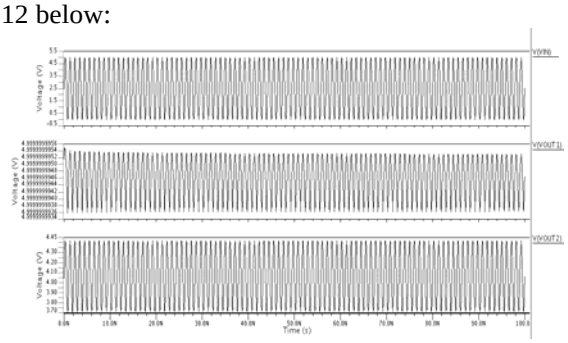

Figure 12: Waveform of Sinusoidal oscillator by using CCIII

Result- Frequency of oscillation is 35MHz and R1=R3=R4=R10K and R2=44Kwith capacitors values of C1=C2=C=10P.

6. Comparison table of Sinusoidal Oscillator using CCI, CCII and CCIII

The comparison table of sinusoidal oscillator is as:

Here sinusoidal oscillator based on first, second and third generation of current conveyor is simulated at 0.18um CMOS technology by using mentor graphics tool. As there is given a table by which the comparison of sinusoidal oscillator by using CCI, CCII and CCIII is done by parameters of power supply, CMOS technology, Accuracy, Bandwidth, Power Consumption and Frequency of oscillation takes place as shown in the table below:

Table 1: Comparison table of sinusoidal oscillator

Parameter	*Sinusoidal CCI*	*Sinusoidal CCII*	*Sinusoidal CCIII*
CMOS process model	0.18um	0.18um	0.18um
Power supply	1.5V	1.5V	1.5V
Accuracy $_{Vx/Vy}$	0.82	0.98	0.90
Power Consumption	88uW	45uW	82uW
Bandwidth $_{Vx/Vy}$	28.05MHz	125MHz	95.06MHz
Accuracy $_{Iz/Ix}$	0.85	0.99	0.93
Frequency of Oscillations	2.5MHz	250MHz	35MHz

7. Conclusion

So, from the comparatively study and implementation of Sinusoidal oscillator using first second and third generation of current conveyor, second generation current conveyor is the best one as compared with others. A proposed CMOS second generation based sinusoidal oscillator has been described and simulate up to a maximum frequency of 250MHz.The circuit follow the input-output characteristics of second generation current conveyor(CCII). The proposed circuit of oscillator allows independent control of the oscillation frequency. The oscillation frequency is controlled with a single grounded resistance which in turns allows digital control of frequency if weighted resistors are used. The oscillation condition and oscillation frequency can be adjusted independently by two control resistors.

Licensed Under Creative Commons Attribution CC BY

Reference

[1] Gilbert, B "Translinear circuits: a proposed classification," Electronicc. Lett. vol.11, pp.14- 16, 1975.
[2] Gilbert, B., "A monolithic Microsystems for analog synthesis of trig metric functions and their inverses, "IEEE JSSC, Vol. SC-17;No.6,pp.1179-1191,1982.
[3] Seevinck, E., "Analysis and synthesis of translinear integrated circuits", Elsevier 1988.
[4] D.Moro,E Tlelo and M.Fakhfakh. "Design of CCI based tunable active filters and sinusoidal oscillator", Proceeding of the 7th International Caribbean conference on devices, Circuits and systems, Mexico,Apr-28-0,2008.
[5] Puja gupta, D.S.Ajnar, "design of sinusoidal oscillator using Second generation Current conveyor", vol.2, Issue: 3; March 2013 ISSN-2250-1991.
[6] M.T.Abuelma'atti,M.A.Al-Quhtani."A new current controlled multiphase sinusoidal oscillator using translinear current conveyor", IEEE Transactions on the circuit and systems nr: 7:vol.45; 1998:pp.881-885.
[7] H.Barthelemy,G Ferri,N.Guerrini, ".A 1.5V CCII based tunable oscillator for possible industrial applications", Procedding of the IEEE international conference on industrial Electronics,2002,L'Aquila,Italy.

Licensed Under Creative Commons Attribution CC BY