International Journal of Science and Research (IJSR)
ISSN (Online): 2319-7064
Index Copernicus Value (2013): 6.14 | Impact Factor (2013): 4.438

Zigbee Based Portable Wireless Industrial Sensor Data Monitoring System using Atmega8

Juvin Agrawal[1], Devendra Kumar[2]

Rustamji Institute of Technology, Tekanpur, Gwalior, India

Abstract: ***In power plants, chemical plants and manufacturing industries environmental conditions play great role in quality of the output. Therefore sensors are placed for monitoring environmental conditions. There are places in industries where human intervention is not possible, in such places sensors are placed and their data can be monitored on display panels at different locations. This system can be made wireless by using XBee-PRO RF Module based on the IEEE 802.15.4/Zigbee standards. Zigbee is a low power wireless transceiver device which in combination with processing unit can be used for sensor data monitoring. A low power microcontroller unit ATmega8 is used to take sensor data, process it and transfer it to Zigbee to transmit at remote location. At remote location a handheld device contains another Zigbee receives data packets and transfers to microcontroller. Microcontroller processes the data packets, calibrate it and display it on LCD (liquid crystal display) for monitoring. In this way, a handheld monitoring unit is created to monitor real time sensor data remotely.***

Keywords: Zigbee, End device, Coordinator, LCD (liquid crystal display), Microcontroller unit, UART (Universal asynchronous receiver transmitter), ADC (Analog to digital converter).

1. Introduction

In industries, deployment of extensive wired sensors [1] in current nuclear facilities, research reactors, fuel fabrication plants, etc. is not feasible due to cabling costs and the added complexity. Even in ancient and historic buildings, the construction works of the cable layout for wired fire alarm systems may damage the building architecture and decoration, which are usually unrecoverable [2]. However, more sensing points can be placed in wireless technology which in turn provides more in-depth understanding of the monitored area or process. By using more number and types of sensors, both redundancy and diversity are enhanced and this results in improving the plant reliability. Meanwhile the wireless technologies are expanding in several ways in the industrial plants and in near future, it is expected to be more involved in environmental and equipment condition monitoring, accident management, safeguards, and security applications [1]. This infrastructure offers high flexibility in sensor placement and needs no particular human control and intervention. A large number of sensor nodes can also be organized to extend the coverage area [1]–[4]. Zigbee is an industry alliance which builds a set of rules on top of the IEEE 802.15.4 standards. It is clear that the feasibility of any communication technology. Wireless sensor system can be implemented in various monitoring applications such as industrial, health, environmental and security [6]. It is good solution that significantly benefits in reducing cost.

A portable handheld system is proposed to monitor sensor data from remote location using Zigbee protocol. This system can take input from almost any kind of environment sensor. Data is first calibrated and then it displays on LCD display. Incoming of data packets can be stop by issuing deactivate command from handheld device which reducing power consumption and unnecessary data monitoring.

2. System Architecture

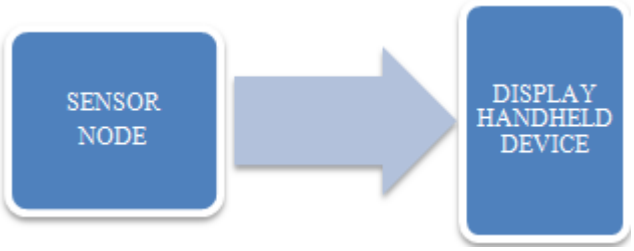

Figure 1: point to point Communication

The system is created by considering point to point communication. There are following two basic parts in this system:

1.1 Sensor Node: this node comprises of sensor, microcontroller unit and Zigbee device. Sensor to sense environmental condition. Microcontroller unit to process data and prepare data packets. Zigbee is used to transmit those data packet to remote device.

1.2 Display handheld device: It works as a co-coordinator. It comprise of a Zigbee device, a microcontroller and a LCD. Zigbee device receives data packets and transfer it to microcontroller unit. Microcontroller processes those data packets and then performs calibration to display data in its SI unit. Environmental value in its SI unit is then display on LCD.

Polling method is used to request data packets. Polling is a method in which the Coordinator requests node to send sensor readings back to the Coordinator. The purpose of polling is to avoid interference from other nodes.

3. Experimental Setup

The experimental setup consists of the following elements:

1.3 **Zigbee Device:** The XBee-PRO RF Modules were engineered to meet IEEE 802.15.4 standards and support the unique needs of low-cost, low-power

wireless sensor networks. The modules require minimal power and provide reliable delivery of data between devices. The modules operate within the ISM 2.4 GHz frequency band. Its range is 90 m outdoor and 30 m indoor. Since it supports UART methodology for communication therefore it is very much compatible with our MCU ATmega8.

1.4 **MCU ATmega8:** High-Performance, Low power Atmel AVR 8-bit Microcontroller. The most important is its Power Consumption at 4MHz, 3V, 25°C, in active mode it is 3.6mA, in Idle Mode it is 1.0mA, and In Power-down Mode it is 0.5µA. This makes it very low power consumption and popular microcontroller unit (MCU).

1.5 **Sensor:** For monitoring temperature, LM35 temperature sensor is utilized. The voltage change per degree centigrade for the temperature sensor LM35D is 10 mV and its full rated temperature is from 0 to 100 degree centigrade.

1.6 **Liquid crystal display:** It displays sensor data for monitoring. A calibrated value of temperature is displayed on LCD. Microcontroller unit initializes LCD and perform calibration to display data in proper format and SI unit.

4. Sensor Data Reading

ATmega8 contains analog to digital converter internally which can be used to convert any analog signal into its corresponding digital value with 8 bit precision. To control it, a control byte is put inside ADC register ADMUX (Analog to Digital converter multiplexer selection register) to set internally accurately generated 2.56 volts as a reference voltage and set ADC0 channel as a input channel. ADCSRA (Analog to Digital converter status register A) register is used during ADC operation to check ADC conversion status like whether ADC conversion completed or not and it is also used to enable ADC peripheral whenever ADC conversion is required.

Temperature sensor LM35 is connected to the ADC channel 0 (ADC0) of ATmega8 MCU. ADC is configured in 8 bit mode and reference voltage is set at 2.56 volts so resolution achieved is 2.56/256 = 10 mV. In LM35D voltage changes by 10 mV for 1 degree centigrade change in temperature and it can detect maximum temperature of 100 degree centigrade; this change can be accurately measured by the ADC peripheral of MCU.

5. Software Used

A. Code vision AVR compiler is used to compile and convert code written in embedded C into HEX file. Then Khazama software is used to burn this HEX file into MCU ATmega8 using USB asp programmer.
B. X-CTU software is used to configure XBee modules. This configured XBee module as coordinator and end device, set source and destination address, set PAN number for dedicated communication.

6. Working

The experimental setup consists of ATmega8 MCU PCB board at sensor node provided with headers to interface XBee module and sensor. Sensor is interfaced at ADC channel of MCU where its output is continuously converted from analog to digital. Then this data is processed and converted into packets inside MCU. Whenever a command is issued by coordinator then these packets are transferred to XBee device as a UART frame shown in Figure 3. Then XBee send them wirelesses to coordinator using IEEE 802.15.4 standards protocol. The above process is shown in Figure 2 in flow chart and experimental setup is shown in Figure 4.

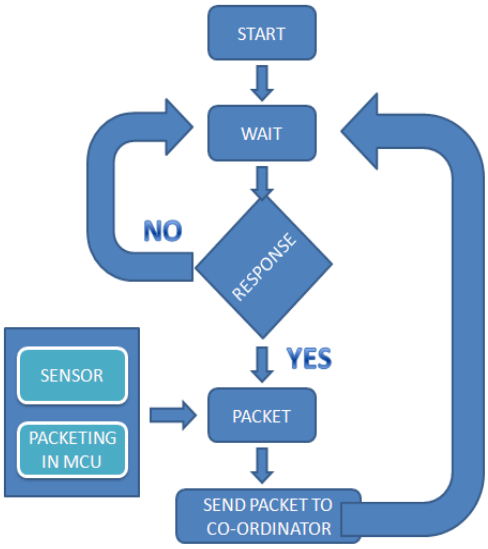

Figure 2: Flow chart of sensor node

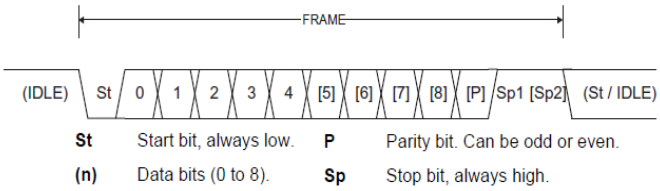

Figure 3: UART frame format

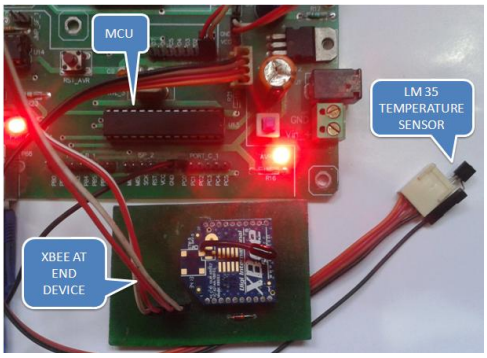

Figure 4: Sensor node

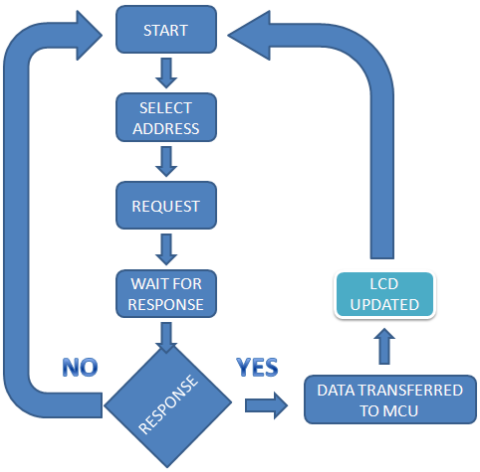

Figure 5: Flow Chart for handheld device (coordinator)

At the handheld device, whenever user required the readings of sensor then it activates a command using switches. Then a command packet is sent to the sensor node device and requested a sensor data packet. As soon as this sensor data packet received at coordinator, it is first converted into data and then calibrated into the SI unit of environmental parameter i.e. for temperature, SI unit is centigrade. After that MCU issues some commands to display this temperature value on LCD.

(a)

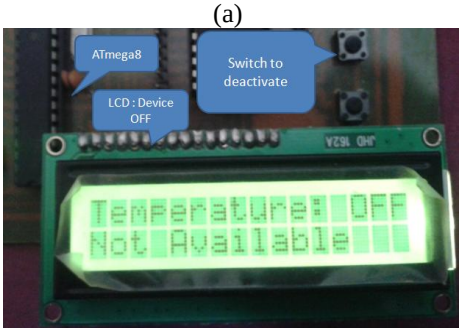

(b)

Figure 6: Handheld device (coordinator) (a) device ON, (b) device OFF.

Whenever it is required to terminate the services of sensor node device, Coordinator will issue a deactivate command. In this way, user can active and deactivate sensor node data monitoring by simply sending command packet, this improves the efficiency of the system as well as beneficiary by avoiding unnecessary monitoring of sensor at any particular instant of time. These ON/OFF commands can be directly issued using switches on handheld coordinator as shown in the Figure 6.

7. Conclusion

A low power, cost effective sensor data monitoring system is proposed in this article. Since this system is using ADC to input sensor data therefore it can be used to read any environmental parameter like temperature, humidity, light etc. Sensor node and handheld display device can be placed 90 m apart which enable user to keep him a long distance away from hazardous monitoring location as in case of chemical plants and nuclear reactors. User can activate and deactivate the sensor node as per requirement which reduces overall power consumption.

8. Future Scope

It is a low cost, low power and less space taking system to monitor sensor data. This system can be upgrade to display data of multiple sensor nodes at single handheld display device. This system can also be modified for telemetry control of devices like monitoring temperature as well as controlling cooling system by using same system model.

References

[1] Rania Ibrahim Gomaa, Ihab Adly Shohdy, Karam Amin Sharshar, Ahmed Safwat Al-Kabbani, and Hani Fikry Ragai, "Real-Time Radiological Monitoring of Nuclear Facilities Using ZigBee Technology" IEEE SENSORS JOURNAL, VOL. 14, NO. 11, NOVEMBER 2014.

[2] Yuan-Yao Shih, *Student Member, IEEE, Wei-Ho Chung, Member, IEEE, Pi-Cheng Hsiu, Member, IEEE,* and Ai-Chun Pang, *Senior Member, IEEE,* "A Mobility-Aware Node Deployment and Tree Construction Framework for ZigBee Wireless Networks" , IEEE TRANSACTIONS ON VEHICULAR TECHNOLOGY, VOL. 62, NO. 6, JULY 2013.

[3] Yu-Kai Huang, Ai-Chun Pang, Senior Member, IEEE, Pi-Cheng Hsiu, Member, IEEE, Weihua Zhuang, Fellow, IEEE, and Pangfeng Liu, Member, IEEE, "Distributed Throughput Optimization for ZigBee Cluster-Tree Networks" , IEEE TRANSACTIONS ON PARALLEL AND DISTRIBUTED SYSTEMS, VOL. 23, NO. 3, MARCH 2012,.

[4] Pedro Cheong, *Student Member, IEEE,* Ka-Fai Chang, *Member, IEEE,* Ying-Hoi Lai, Sut-KamHo, Iam-Keong Sou, and Kam-Weng Tam, *Senior Member, IEEE,* "A ZigBee-Based Wireless Sensor Network Node for Ultraviolet Detection of Flame", IEEE TRANSACTIONS ON INDUSTRIAL ELECTRONICS, VOL. 58, NO. 11, NOVEMBER 2011.

[5] Junji Takahashi, Takuya Yamaguchi, Kosuke Sekiyama, and Toshio Fukuda, *Fellow, IEEE,* "Communication Timing Control and Topology Reconfiguration of a Sink-Free Meshed Sensor Network With Mobile Robots", IEEE/ASME TRANSACTIONS ON MECHATRONICS, VOL. 14, NO. 2, APRIL 2009.

[6] Hsin-Mu Tsai and Ozan K. Tonguz, Cem Saraydar, Timothy Talty, Michael Ames AND Andrew Macdonald, "ZIGBEE-BASED INTRA-CAR WIRELESS SENSOR NETWORKS: A CASE STUDY" , IEEE Wireless Communications ,December 2007.

[7] Data Communications & Networking, **By A. Behrouz Forouzan**
[8] Data and Computer Communications, **By Stalling**

Author Profile

Juvin Agrawal is currently pursuing his post graduation (M.Tech.) from Rustamji institute of technology, Tekanpur, Gwalior (M.P.), India – 475005. He is currently working on Wireless sensor network using embedded technology and Zigbee protocols. He has also work on image filtering and published his paper on image filtering in international journal.

Devendra Kumar is currently working as a Assistant Professor in department of electronics & communication engineering, Rustamji institute of technology, Tekanpur, Gwalior (M.P.), India – 475005. His area of specialization is microwave, antenna and radar. He is having 20 years of experience in aviation industry.