International Journal of Science and Research (IJSR)
ISSN (Online): 2319-7064
Index Copernicus Value (2013): 6.14 | Impact Factor (2013): 4.438

Performance Evaluation of Unidirectional TDM PON and WDM PON

Rini T. Jacob[1], Vidya Raj[2]

[1]P G Scholar, Optoelectronics and Communication Systems, Dept. of Electronics and Communication Engineering, T. K. M. Institute of Technology, Kollam, Kerala, India

[2]Assistant Professor, Dept. of Electronics and Communication Engineering, T. K. M. Institute of Technology, Kollam, Kerala, India

Abstract: ***Access networks are developed for reducing the congestion occurred due to high bandwidth demand. Active Optical Network (AON), the first fiber based network, caused less reliability and high cost. Thus AON is replaced by Passive Optical Networks (PON), which is a point to multipoint optical fiber access network. It uses passive components to enable the optical fiber to serve multiple users. The different unidirectional PON technologies such as Time Division Multiplexing Passive Optical Networks (TDM PON) and Wavelength Division Multiplexing Passive Optical Networks (WDM PON), with different capacities (users) for varying fiber length are simulated and their performances are compared based on the Quality factor (Q-factor) and the Bit Error Rate (BER) using OptiSystem 12.0 software. In the analysis, the performance of the unidirectional WDM PON with 2 user systems were better with high Q-factor and low BER compared to that of 2 user TDM PON systems.***

Keywords: Access Networks, Passive Optical Networks (PON), TDM PON, WDM PON.

1. Introduction

The advancement in the communication systems has increased the need for large bandwidth to send more data at higher speed. The subscribers demand high speed network for voice and media-rich services. This demands the networks of higher capacities at lower costs. When a data is transferred over the network, a reliable end packet delivery is one of basic requirement of both the user and the network, but there are many major causes that can result packet loss, such as congestion over the network. The access methods based on the optical fiber is the ultimate solution in delivering different services to the customer premises.

The access network connects the service provider Central Offices (COs) to the subscribers. An access network is the part of a communication network which connects the subscribers to their immediate service provider. Active Optical Network (AON), the first based access network has been characterized by a single fiber which carries all traffic to a Remote Node (RN) mainly electrically powered switching equipment that is placed close to the end users from the central office. The Active Optical Network (AON) has the distance and the bandwidth limitations. Later the active node is replaced with a passive component leading to the development of Passive Optical Network (PON) [5].

A Passive Optical Network (PON) is a fiber-optic access network architecture that brings fiber cabling and signals to the home using a point-to-multipoint scheme that enables a single optical fiber to serve multiple premises by means of passive components. A PON consists of an Optical Line Terminal (OLT) at the service provider's central office and a number of Optical Network Units (ONUs) near end users. It is a shared network, in that the OLT sends a single stream of downstream traffic that is seen by all ONUs. Each ONU only reads the content of those packets that are addressed to it. There are different types of PON standards, which mainly differ from each other in terms of their data rates.

2. Passive Optical Networks

There are three main types of Passive Optical Networks (PON) depending on the data multiplexing scheme. The earlier deployed PON technology is Time Division Multiplexing (TDM) PON, where traffic from and to multiple ONUs are TDM multiplexed onto the upstream and downstream wavelength. The main TDM PONs are BPON, EPON and GPON. Wavelength Division Multiplexing (WDM) PON and Orthogonal Frequency Division Multiplexing (OFDM) PON constitute the other two types of PON technologies. WDM PON uses multiple wavelengths to provision bandwidth to ONUs, while OFDM PON employs a number of orthogonal subcarriers to transmit traffic from and to ONUs. With the WDM or OFDM technology, these PONs are potentially able to provide higher than 40 Gbps data rate and even Tbps data rate. This paper is mainly deals with the performance comparison of TDM and WDM PONs.

2.1 TDM PON

TDM PON is the application of time-division multiplexing in Passive Optical Networks (PON). The two key network functions of an OLT are to control user traffic and to assign bandwidth dynamically to the ONT modules. Since up to 32 ONTs use the same wavelength and share a common optical fiber transmission line, some type of transmission synchronization must be used to avoid collisions between traffic coming from different ONTs. The simplest method is to use Time-Division Multiple Access (TDMA), wherein each user transmits information within a specific assigned time slot at a prearranged data rate. The multiplexed downstream signal is broadcast to all the ONTs. Each ONT discards or accepts the incoming information packets, depending on the packet header addressing. Sending traffic in the upstream direction is more complicated, since all users have to time share the same wavelength. To avoid collisions between the transmissions of different users, the system uses a TDMA protocol. The OLT controls and coordinates the

traffic from each ONT by sending permissions to them to transmit during a specific time slot. The time slots are synchronized so that transmission bursts from different users do not collide. Since each end terminal is located at different distances from the central office, the OLT uses a ranging technique to measure the logical distance between the users and the OLT. This enables each ONT to adjust its transmission timing properly to avoid traffic collisions.

2.2 WDM PON

WDM-PON is the application of wavelength-division multiplexing that uses individual wavelength for each PON network. The ONUs have light sources at different tuned wavelengths coexisting in the same fiber, increasing the total network bandwidth and the number of users served in the optical access network. Related to communications mode, the WDMPON may use point-to-point communications, point-to-multipoint or hybrid solutions. In the point-to-point, no dynamic bandwidth allocation mechanisms are needed. The point-to-multipoint uses a WDM/TDM, achieving high resource utilization efficiency.

WDM PON uses multiple wavelengths in a single fiber to multiply the capacity without increasing the data rate. Typically a TDM PON uses a single wavelength whereas a WDM PON uses many wavelengths. A TDM PON provides more channels but moderate bandwidth. As a consequence both solutions have merit and thus both methods need evaluation. PON has been researched for over 10 years and many architectures have been proposed, through which WDM PON increases the broadband access capacity. In a generic PON architecture a SMF fiber connects a Central Office to a distribution center which contains passive splitters or/and Multiplexers and Demultiplexer. Minimizing the active components in PONs provides cost advantage since power and maintenance are one of the major cost factors for the local exchange carrier.

3. System Modelling

3.1 Unidirectional TDM PON

The unidirectional TDM PON is the PON with only the downstream transmission. Figure 1 describes the simulation diagram for unidirectional TDM PON with 2 users. The OLT is the transmitter block, which consists of a User Defined Bit Sequence Generator, NRZ Pulse Generator, a Continuous Wave Laser and Mach-Zehnder Modulator. The receiver block forms the ONU, which includes APD photodetector, low pass Bessel filter, 3R regenerator and BER analyzer. The unidirectional TDM PON has been simulated using the wavelength 1490 nm for different fiber lengths. With the help of the User Defined Bit Sequence Generator the data signal is generated at a data rate of 2.5 Gbps.

The wavelength is set as 1490 nm and the power as 0.2 dBm in the Continuous Wave (CW) laser source. Mach- Zehnder Modulator (MZM) is used to vary the intensity of the light from the CW laser according to the output of the NRZ pulse generator. The output of the Mach-Zehnder modulator will be transmitted to the ONUs through the optical fiber channel with attenuation of 0.2 dB/km. An optical attenuator with a small attenuation is used to reduce the power level of the optical signal transmitting through the optical fiber. At the receiver end a power splitter is used to receive and to split the signals to the users. Each of the signals is detected by the photodetectors corresponding to each ONUs. Here, the APD is used as the photo detector. The output of the APD is fed to the low pass Bessel filter which is used to filter higher frequency components. The filtered output is fed to a 3R regenerator and got the data which was initially transmitted and the output is analyzed using a BER analyzer.

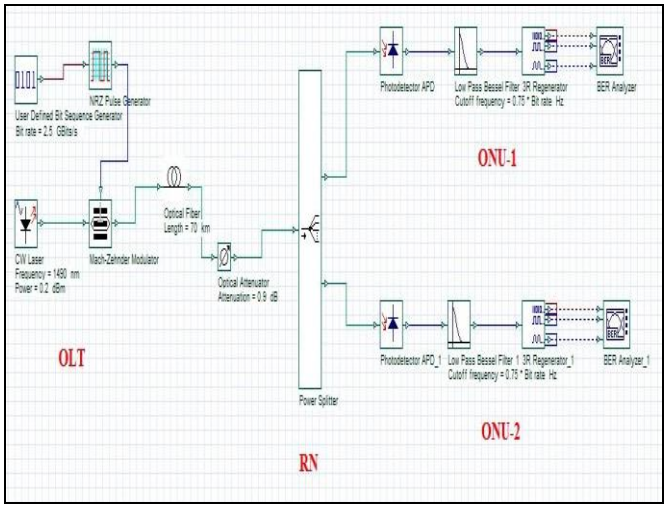

Figure 1: Simulation Layout of Unidirectional TDM PON

3.2 Unidirectional WDM PON

The unidirectional WDM PON is also the PON with the downstream transmission. Figure 2 indicates the simulation set up for unidirectional WDM PON with 2 users. The unidirectional WDM PON has been simulated using the wavelengths 1490 nm and 1491 nm for two users with different fiber lengths. Here the OLT, the transmitter block, consists of two User Defined Bit Sequence Generators, NRZ Pulse Generators, Continuous Wave Lasers and Mach-Zehnder Modulators each of which corresponds to wavelengths 1490 nm and 1491 nm. With the help of the User Defined Bit Sequence Generators the data signal is generated at the same data rate as of TDM PON. The generated signal is then encoded by using NRZ pulse generator. The wavelengths are set as 1490 nm and 1491 nm and the power as 0.2 dBm in the Continuous Wave (CW) laser sources. Mach-Zehnder Modulator (MZM) is an optical modulator which is used to vary the intensity of the light from the CW laser according to the output of the NRZ pulse generator. The output of the Mach-Zehnder modulator will be transmitted to the ONUs through the optical fiber channel.

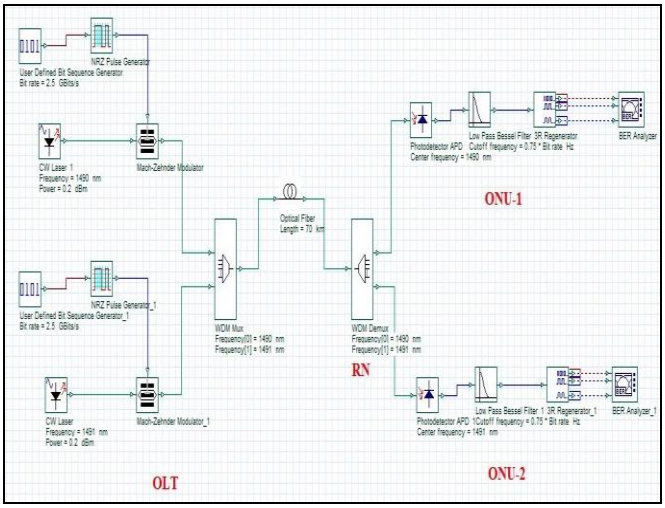

Figure 2: Simulation Layout of Unidirectional WDM PON

A WDM multiplexer present at the OLT is used for combining these signals and transmitting as a single signal through the optical fiber. The WDM demultiplexer forms the Remote Node (RN), which splits the signals corresponding to each of the earlier wavelengths and the ONUs with the corresponding wavelengths receive the signals. The ONU block is same as that of TDM PON, which includes APD photodetector, low pass Bessel filter, 3R regenerator and BER analyzer.

4. Results and Discussions

4.1 Performance Analysis of Unidirectional TDM PON

The performance of a unidirectional TDM PON system with 2 users is analyzed using the parameters such as Q-factor and Bit Error Rate (BER). The quality and the bit error rate of the output signal that is received by the users are varying with the distance.

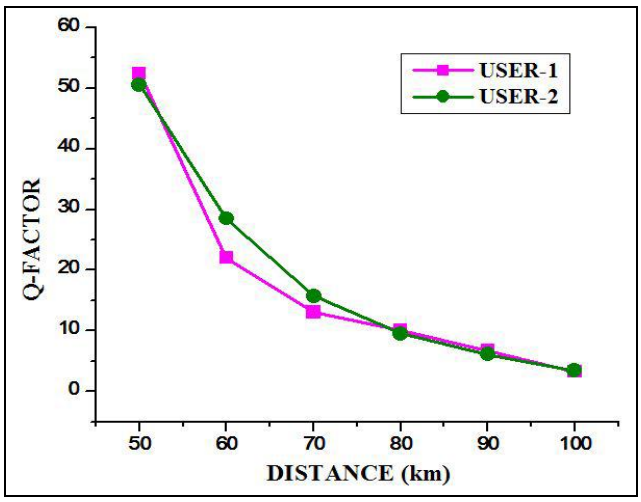

Figure 3: Relationship of Q-factor with Distance for Unidirectional TDM PON with 2 users

Figure 3 shows the variation of Q-factor with distance for the unidirectional TDM PON system. The graph shows that the Q-factor value is varied for a distance from 50 to 100 km at an input power of 0.2 dBm. The graphs show that as the distance increases, the Q-factor decreases.

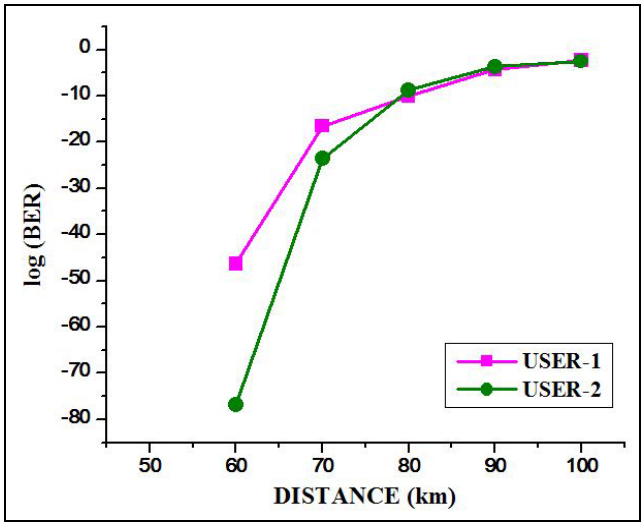

Figure 4: Relationship of log (BER) with Distance for Unidirectional TDM PON with 2 users

Figure 4 indicates the relationship between log (BER) with distance for the unidirectional TDM PON with 2 users. The BER value is also taken for a distance of 50 to 100 km at an input power of 0.2 dBm. The graph shows that as the distance increases, the log (BER) increases.

4.2 Performance Analysis of Unidirectional WDM PON

The performance of the unidirectional WDM PON system with 2 users is also analyzed using the parameters such as Q-factor and Bit Error Rate (BER). Figure 5 shows the relationship of Q-factor with distance for the unidirectional WDM PON system.

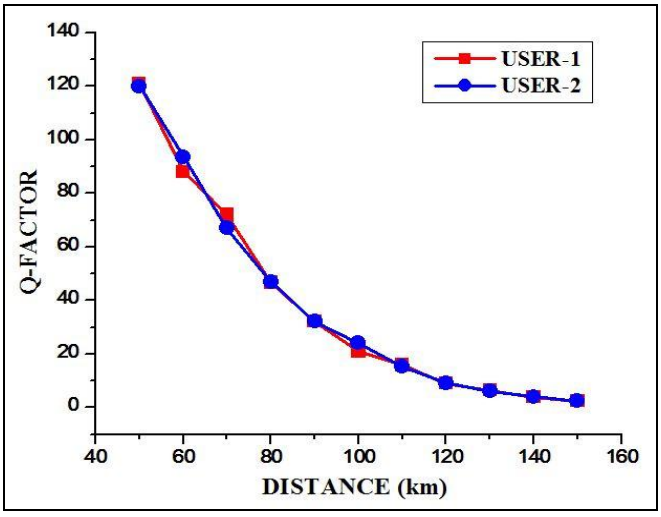

Figure 5: Relationship of Q-factor with Distance for Unidirectional WDM PON with 2 users

The graph explains that the Q-factor value is varied for a distance from 50 to 150 km at an input power of 0.2 dBm. The graphs show that as the distance increases, the Q-factor decreases. It can be seen that by using WDM PON, the quality of the received signal and the distance covered by the transmitted signal has been increased when compared with the TDM PON system.

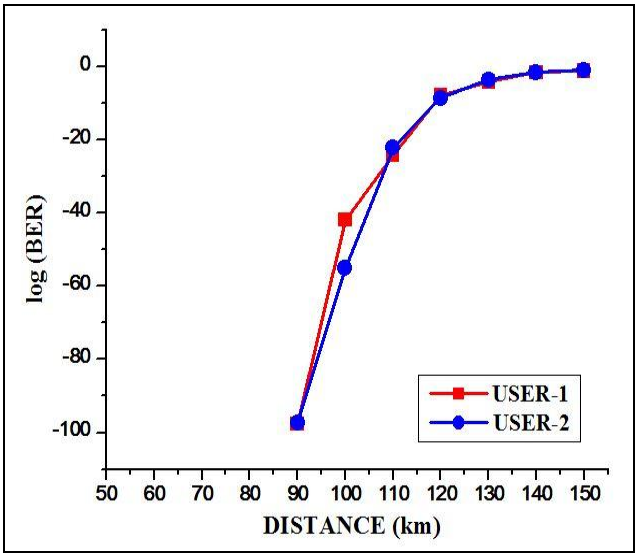

Figure 4: Relationship of log (BER) with Distance for Unidirectional WDM PON with 2 users

Figure 4 indicates the relationship between log (BER) with distance for the unidirectional WDM PON with 2 users. The BER value is also varied for a distance of 50 to 150 km at an input power of 0.2 dBm. The graph shows that as the distance increases, the log (BER) increases. Here also it can be seen that by using WDM PON, the number of errors in the received signal have reduced and the distance covered by the transmitted signal has been increased when compared with the TDM PON system.

5. Conclusion

Passive Optical Networks (PON) plays an important role in the development of the Fiber to the Home (FTTH) networks. The PON is considered as one of the most successful access architecture that can provide high capacity and long reach. From the analysis, it can be seen that for the same data rates, the performance of the unidirectional WDM PON with 2 users is better with high Q-factor and low BER compared to that of the unidirectional TDM PON system. From the graphs, it is found that, as the length of the fiber increases, the Q-factor decreases and the BER increases. As the technology has improved from the TDM to WDM, in the WDM PON, the quality of the received signal and the distance covered by the transmitted signal has been increased and the number of errors in the received signal has reduced when compared with the TDM PON system. Therefore, WDM PON is considered as the promising solution for the next generation Passive Optical Networks (PON) and also named as long range PONs.

References

[1] Nahla Abdulrahman Hussain, "A survey/Development of Passive Optical Access Networks Technologies", International Journal of Advanced Research, Vol.2, Issue 2, pp.820-828, 2014.

[2] N. Ansari and J. Zhang, "Media Access Control and Resource Allocation: For Next Generation Passive Optical Networks", Springer Briefs in Applied Sciences and Technology, pp.11-22, 2013.

[3] Anil Kumar and Ankur Singhal, "Simulative Performance Evaluation of GPON and WDMPON", International Journal of Latest Research in Science and Technology, Vol. 2, Issue 5, pp.58-61, 2013.

[4] Jitender Kumar, Manoj Arora and R. S. Chauhan, "Performance Analysis of WDM PON at 10 Gb/s", International Journal of Engineering and Advanced Technology (IJEAT), Vol.1, Issue 3, pp.213-216, February 2012.

[5] Redhwan Q. Shaddad, Abu Bakar Mohammad, Sevia M. Idrus, Abdulaziz M. Al-hetar and Nasir A. Al-geelani, "Emerging Optical Broadband Access Networks from TDM PON to OFDM PON", PIERS Proceedings, Kuala Lumpur, Malaysia, 2012.

[6] Ruchi Malhotra and Dr. Manindar Pal, "Performance Analysis in Passive Optical Networks (PONS)", International Journal of Advanced Research in Computer and Communication Engineering, Vol.1, Issue 4, pp.263-267, 2012.

[7] Alex Vukovic, Khaled Maamoun, Heng Hua and Michel Savoie, "Performance Characterization of PON Technologies", Proc.SPIE, Vol.6796, 2007.